SAMSUNG

Climate Solutions



# Product Catalogue

## Commercial

# 2020

# Highlights for 2020

## Wind-Free™

Samsung introduced the market's first air conditioner with Wind-Free™ technology in 2017. Wind-Free™ Cooling disperses fresh air gently and evenly through thousands of micro-holes, creating "Still Air" conditions[1]. This allows people to live, work and relax comfortably without experiencing unpleasant cold drafts. For 2020, Samsung will introduce a completely new Wind-Free™ wall-mounted model in a modernised design for its VRF product range, featuring new intelligent technologies for enhanced indoor comfort and improved energy efficiency.




### Wind-Free™ Avant




- New compressor with Digital Inverter Boost technology for improved energy efficiency.
- Equipped with NASA communication protocol.
- Available for VRF (DVM) in capacity range 1.5 - 8.2 kW, with or without EEV.

## Wi-Fi Control

The new optional Wi-Fi Kit allows users to control up to 16 connectable indoor units via smartphone with the Samsung SmartThings app[2]. The app checks indoor temperature, outdoor temperature and air quality levels, and then recommends the optimal operating mode. It also offers the option of adding user scenes such as working, walking or resting. The geofencing functionality allows the room temperature to be automatically set at the desired level when the user approaches to within a preset distance of 100 m - 150 km from the building.




### Wi-Fi Kit

- Wi-Fi control of up to 16 indoor units through Samsung SmartThings.
- Welcome Cooling or Heating through geofencing functionality.
- Individual power monitoring for up to 16 outdoor units.

[1] ASHRAE (the American Society of Heating, Refrigeration, and Air-Conditioning Engineers) defines "Still Air" as air currents moving at speeds below 0.15 m/s, with no cold drafts.
[2] Available on iPhones and Android devices. A network connection is required. Samsung application account is necessary.



## HVM

Samsung HVM (HydroVariableMulti) is a water-based, hybrid VRF solution that is flexible and environmentally friendly. It offers the existing benefits of traditional VRF systems, with the added advantage of future-ready versatility. For 2020, the compact Samsung HVM Chiller units are compatible with an extended range of Fan Coil Units (FCU). The complete system's integrated and standardised control solution makes for efficient installation and commissioning. Control and maintenance is easy with Samsung's Data Management Server, DMS 2.5.




### Wind-Free™ 1-Way Cassette FCU




- Two-step cooling: Fast Cooling mode and Wind-Free™ Cooling mode.
- Built-in condensation drain pump and humidity sensor.
- Compatible with Wi-Fi Kit.

From the beginning of 2020, Samsung HVM will also be compatible with new Concealed FCU and Cased FCU units.

## b.IoT

Samsung b.IoT (building Internet of Things) is a building management solution that is designed to efficiently manage and save on energy consumption. It is an open platform with various expandability and compatibility options, enabling the integrated control of the facility's major systems, such as VRF and third-party devices via BACnet interface.




### b.IoT

- Open platform.
- Easy and smart operation.
- Effective energy consumption management.
- Intelligent energy-saving algorithms.

For more detailed product information and technical specifications, please consult the respective product pages of this Product Catalogue.

# Product overview

## VRF (DVM)

A Samsung VRF air conditioning system offers high installation flexibility with compact DVM outdoor units, each of which can connect to up to 80 indoor units. This is an ideal solution for medium-sized to large commercial buildings, with the option of independently cooling or heating multiple rooms simultaneously.

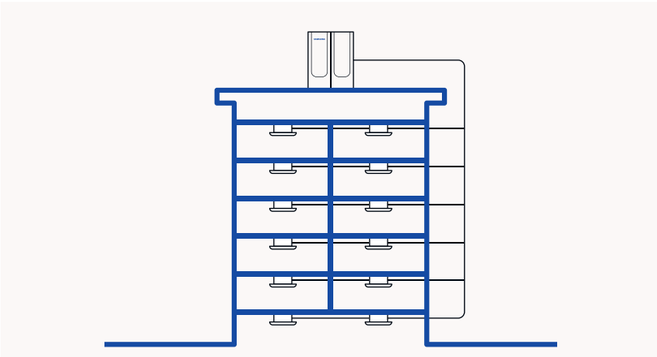

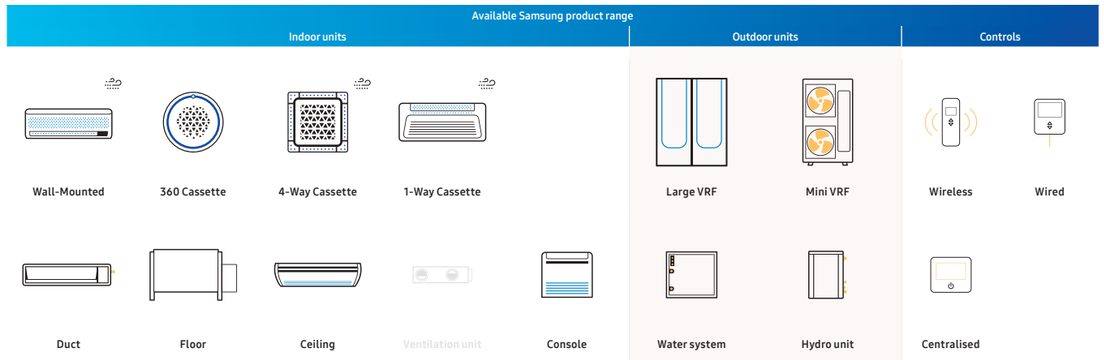


## VRF Chiller (HVM)

A Samsung VRF Chiller air conditioning system follows a modular concept with the option of combining up to 16 HVM outdoor units to form one climate solution, which can be connected to a wide range of Fan Coil Units. The system utilises water for comfortable cooling and heating of any type of space.

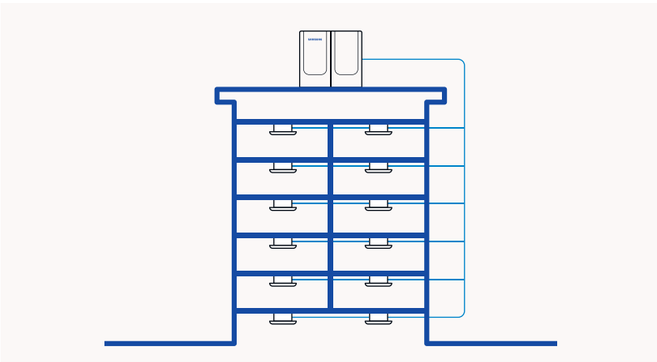

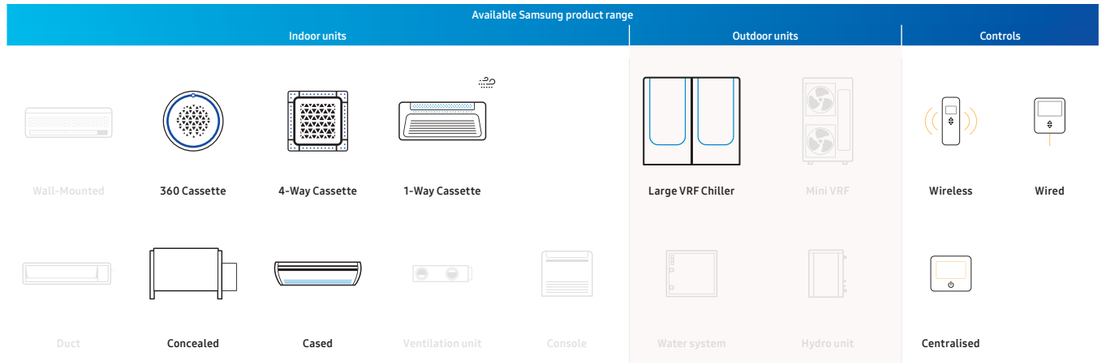


## Ventilation (ERV)

A Samsung ERV system brings fresh outside air into a room to optimise indoor air quality, while automatically adjusting its operation mode in accordance with indoor and outdoor temperatures. It can be connected to a Samsung VRF system to form a total climate solution.

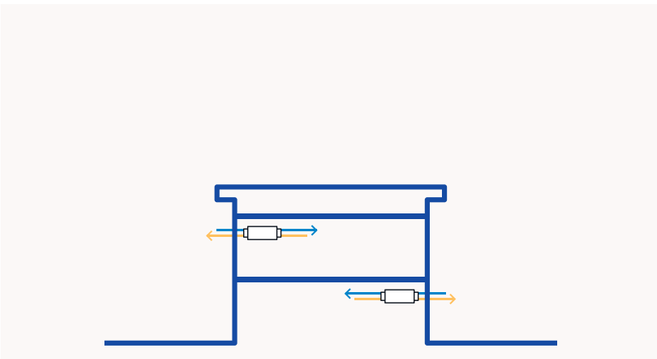

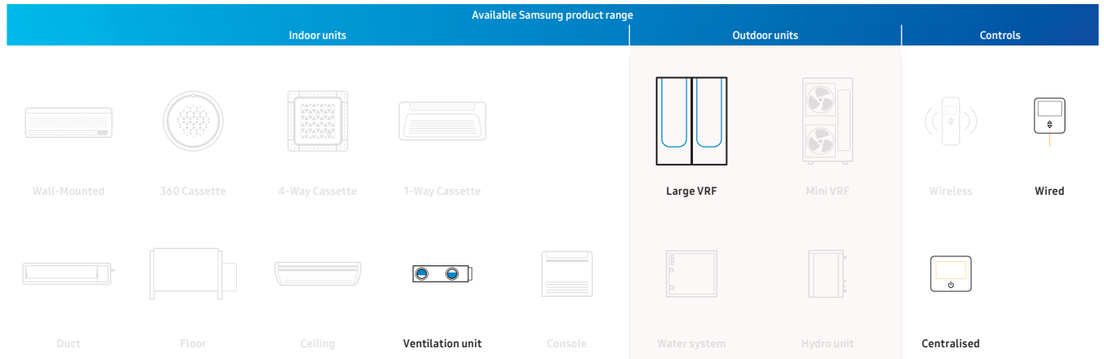


Schematic drawings are for illustrative purposes only. For accurate installation information please consult the technical data book. The selection of the exact product is subject to specific application conditions. FCU = Fan Coil Unit. For more detailed product information and technical specifications, please consult the respective product pages of this Product Catalogue. = available as Wind-Free™. Wind-Free™ versions of Wall-Mounted for VRF and 1-Way Cassette for VRF Chiller will be available from mid-2020.

# Table of contents


## Introduction
Samsung Climate Solutions at a glance
Samsung reference projects in the spotlight
Regulations and standards

### Innovations in detail
DVM S
DVM S Eco
DVM S Water
Heat Recovery for DVM
HVM Chiller
Slim Duct S
Duct S
Wind-Free™ Wall-Mounted NEW FOR MID-2020
360 Cassette MARKET FIRST
Wind-Free™ 4-Way Cassette MARKET FIRST
Wind-Free™ 1-Way Cassette MARKET FIRST
ERV (Plus)
Air Handling Unit (AHU) Kit
b.IoT NEW

## VRF (DVM)
Line-up outdoor
Line-up indoor
Selection guide
Nomenclature
DVM S Eco Heat Pump
DVM S Essential Heat Pump (2-Pipe)
DVM S Standard Heat Pump (2-Pipe)
DVM S High EER Heat Pump (2-Pipe)
DVM S Eco Heat Recovery
DVM S High EER Heat Recovery (3-Pipe)
DVM S Water
360 Cassette MARKET FIRST
Wind-Free™ 4-Way Cassette MARKET FIRST
Wind-Free™ 1-Way Cassette MARKET FIRST
Duct S
LSP Slim Duct
MSP Duct
HSP Duct
Big Duct
Console
Floor/Ceiling
Big Ceiling
Concealed Floor-Standing
Concealed Floor-Standing High Static Pressure
Packaged Floor-Standing
Boracay Wall-Mounted (EEV excluded)
Boracay Wall-Mounted (EEV included)
AR5000 Wall-Mounted (EEV included)
Max Wall-Mounted
Hydro Unit
Mode Control Unit (MCU)
AHU Kit for Outdoor Unit

## VRF Chiller (HVM)
Line-up outdoor
Line-up indoor
Selection guide
Nomenclature
HVM Chiller
1-Way Cassette FCU
4-Way Cassette FCU
360 Cassette FCU
Concealed FCU NEW
Cased FCU NEW

## Ventilation (ERV)
ERV
ERV Plus for DVM S
OAP Duct for DVM S

## Controls
Line-up
Selection guide
Features and dimensional drawings

## Accessories
Line-up

## Design and support
Samsung Climate Solutions Partner Portal
Samsung DVM-Pro
Samsung HVM Selection Tool NEW
Samsung specialist design support
Samsung Climate Solutions Academy


This document may either contain preliminary values or may lack some values that were not yet available at the time of creation. To obtain the latest information, please consult the Samsung Climate Solutions Partner Portal at **partnerhub.samsung.com/climate** or contact your Samsung representative.

# Samsung Climate Solutions at a glance




At Samsung, we focus on providing cutting-edge innovations in indoor climate comfort and being a leader in intelligent digital connectivity solutions.

## Our market-centric product ranges

| | Home | Hotel | Retail | Office | Restaurant | Education |
|---|---|---|---|---|---|---|
| Residential | RAC \| FJM | | | | | |
| Light Commercial | CAC \| FJM | | | CAC | | |
| Commercial | | DVM \| HVM \| ERV | | | | |
| Heating | EHS | | | | | |
| Controls | CONTROLS | | | | | |




## Services we provide to empower our partners





# Milestone highlights that make us proud

**1974**
Samsung introduces its first air conditioner.

**2005**
Samsung Electronics enters the European market for commercial air conditioning.

**2017**
Samsung Electronics opens Samsung Electronics Air Conditioner Europe B.V. (SEACE) in Amsterdam.

**2014**



Arrival of the Samsung TDM concept, an all-in-one heat pump solution for heating, cooling and domestic hot water supply.

**2015**



Introduction of the Samsung 360 Cassette, the world's first circular air conditioner that fits seamlessly into the design of any space.

**2017**

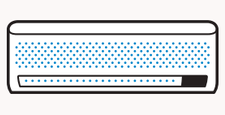

Samsung Wind-Free™ technology comes onto the market, gently and evenly dispersing fresh air through thousands of micro-holes to limit cold drafts.

## Our flagship technologies that enrich people's lives

**Wind-Free™**



Wind-Free™ Cooling

**SmartThings**



Wi-Fi Control

**b.IoT**



Building Management System

## Our European footprint with the locations from which we operate



1 | Samsung Electronics Air Conditioner Europe B.V.
16 | Samsung offices
8 | Warehouses
9 | Training centres

## Samsung reference projects in the spotlight

# Toptani Shopping Mall






**Edit Grabovari**
CFO
Energy Systems Ergova Ltd

**Toptani Shopping Mall**
Rr. Abdi Toptani, Tirane 1001, Albania

"Toptani Shopping Mall is one of the best shopping malls in Albania with the world's leading brands. We wanted the best in air conditioning solutions to match that, and we naturally installed Samsung climate solutions. DVM S has world-class energy efficiency and can minimise the operational costs of the building. The beautiful indoor units provided by Samsung harmonise with the interior of the shop, giving great satisfaction to the store owner and the consumer."

### Application

Retail

### Samsung products installed

360 Cassette | 4-Way Cassette | Duct | DVM S

## Samsung reference projects in the spotlight

# Hotel Oceania le Jura





**Marc Bonivert**
Manager Hotel Oceania le Jura

**Hotel Oceania le Jura**
14 Avenue Maréchal Foch
21000 Dijon, France

"The Hotel Oceania le Jura is housed in a building constructed in the 18th century. For this reason, there is not enough space to install a large outdoor unit, which was a cause for concern when selecting air conditioning products. We eventually chose Samsung DVM S. Unlike a central chiller, the DVM S was the best choice for our hotel because we could install an outdoor unit with a small footprint in a compact space above the building."

### Application



Hotel

### Samsung products installed

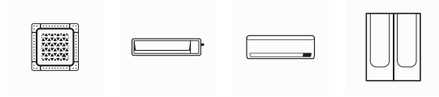

4-Way Cassette | Duct | Wall-Mounted | DVM S





Introduction

# Regulations and standards

Samsung strives to provide customers with new eco-friendly experiences and lead the way to a sustainable future for the global community through innovative and eco-friendly products and technology. We endeavour to comply with international environmental standards, and European and national laws and regulations across our climate solutions operations. Samsung also conducts environmental improvement activities across all product development, production, distribution, use and disposal phases.

## Ecodesign

The Ecodesign Directive for Energy Related Products (ErP) aims to raise awareness about the energy efficiency of products, while stimulating manufacturers to make their products more energy efficient from the design phase. The Directive is applicable to a broad range of cooling and heating products, which have been divided into different lots.

LOT 10 was implemented on 1 January 2013 and covers air conditioners with a capacity less than 12 kW, typically residential or light commercial systems. It requires manufacturers to provide highly visible information regarding energy efficiency, including an energy label. LOT 1 and 2 took effect on 26 September 2015 and include residential air to water heat pumps for space heating and hot water production respectively (< 400 kW). It is mandatory to provide energy labels for products with a capacity less than 70 kW. On 1 January 2018, LOT 21 came into force. LOT 21 covers commercial cooling and heating products with a capacity greater than 12 kW. It does not require manufacturers to publish energy labels, but energy performance data should be made available online.

| | LOTS 1/2 | LOT 10 | LOT 21 |
|---|---|---|---|
| **In effect since** | 26 September 2015 | 1 January 2013 | 1 January 2018 |
| **Applicable products** | A2W heat pumps < 400 kW | Air conditioners < 12 kW | Air conditioners > 12 kW |
| **Energy label required** | ✓ | ✓ | |
| **Samsung product range** |  EHS |  RAC \| FJM \| CAC | 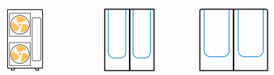 CAC \| DVM \| HVM |

## F-Gas regulation

The EU aims to reduce the environmental impact of F-gases through the reduction of the $CO_2$ equivalent consumption of HFCs (hydrofluorocarbons). EU regulation 517/2014 prescribes a phase-down of HFCs, where the quantities of HFCs that are placed on the market are gradually reduced through the allocation of quotas by the European Commission. The phase-down targets are expressed in $CO_2$ equivalents (= kg x GWP - Global Warming Potential) and aim to reduce HFC consumption by 79 % in 2030. For new installations of single split air conditioners with a refrigerant charge below 3 kg, the GWP limit is set at 750 starting in 2025. The regulation has been put into force to motivate industry and users to transition to refrigerants with a lower GWP. Samsung is accelerating the transition towards lower GWP refrigerants, such as R32, and will continue its investments in environmentally friendly alternatives.

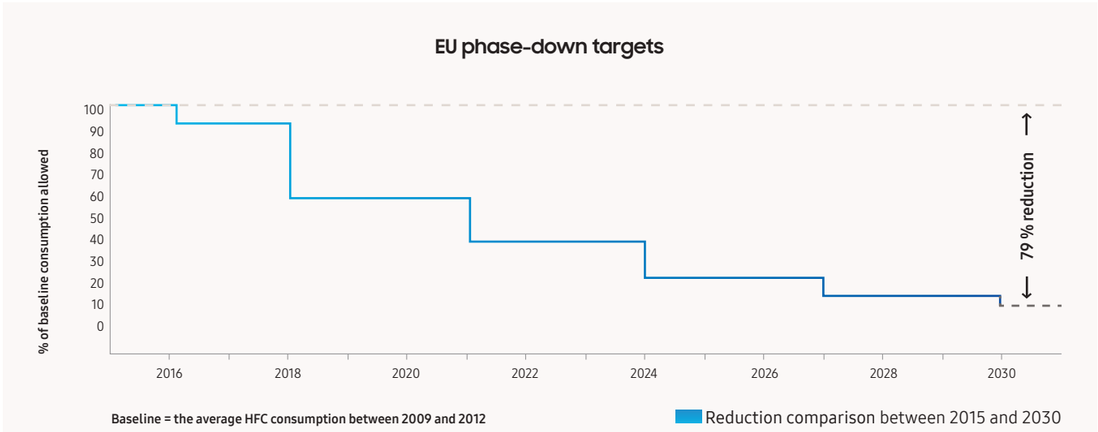


## EN378 standard

Effective since 31 May 2017, the European EN378 standard provides guidance for companies who design, install, operate and maintain air conditioners, heat pumps and similar systems that use refrigerants. Based on the access characteristics of occupied spaces into which a refrigerant could leak, and an assessment of the refrigerant's toxicity and flammability, refrigerant charge limits are set and safety measures are prescribed to mitigate risk in the possible event of a refrigerant leakage.

Access categories range from general access areas, such as hotels, restaurants and shopping areas, to more restricted supervised and authorised areas.

The location of refrigerant systems follows a classification of four classes, where VRF systems are typically defined as Class II, either located in a machine room or in the open air.Subject to the available ventilation in rooms, additional measures may be needed such as mechanical ventilation or detectors.

Samsung offers specialist support to professionals in the design of cooling and heating installations. Please contact your Samsung representative to enquire about support in aligning your project design with the requirements of the EN378 standard.

Introduction

**WEEE: Electronic Waste**

Samsung adheres to the WEEE (Waste Electrical and Electronic Equipment) Directive, which applies the principles of extended producer responsibility. This Directive stipulates the safe collection, treatment, recycling and environmentally sound disposal of all electrical and electronic equipment. Working with collective recycling schemes in each EU member state, Samsung co-finances the take-back and recycling of electronic products.

**Batteries**

Samsung has been giving new life to used batteries by funding collection, treatment and recycling by local battery recycling organisations.

**Packaging**

Samsung works together with recycling schemes and governmental organisations to collect, separate and reuse all packaging materials at various points in the distribution chain. Many materials can be recycled into new products and recycling helps to save natural resources. Recycling packaging helps to reuse valuable raw materials and to reduce the overall impact on the environment.

# Innovations in detail



## DVM S

### Flash Injection - Scroll Compressor

The Samsung asymmetric scroll compressor combines fluid dynamic design with minimum refrigerant loss during compression. Thanks to advanced refrigerant control technology, Samsung's flash injection extends its heating operation range at -25 °C by increasing refrigerant flow by 32 %[1], meaning maximum performance at all times. Even at lower temperatures, DVM S continues to perform, delivering reliable comfort in challenging conditions.

[1] Compared to Samsung vapour injection technology.

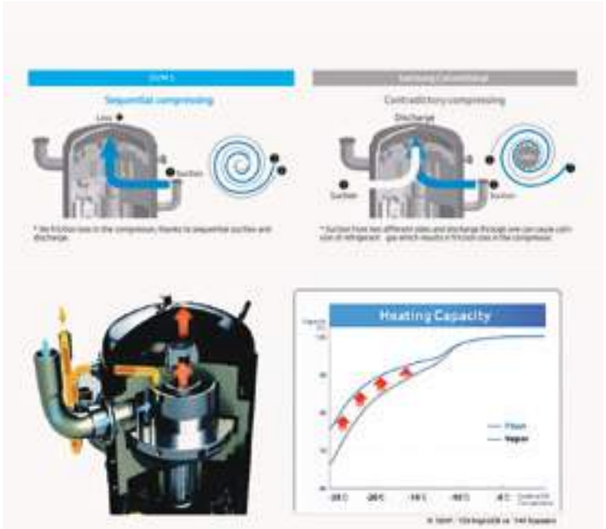


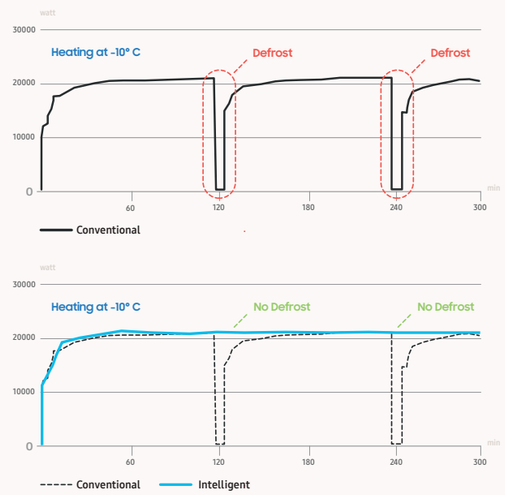


### Intelligent Defrost

When humidity levels are low, a unit can often take longer than normal to activate a defrost operation. When a system operates at a lower performance level, faults may occur. In order to prevent such issues, and to help maintain the desired indoor temperature, 'Intelligent Defrost' performs a periodic defrost operation.







## DVM S

### External Static Pressure

DVM S is designed to manage high external static pressures of up to 78 Pa. This resilient build and design can help in situations involving difficult or complex installation conditions.

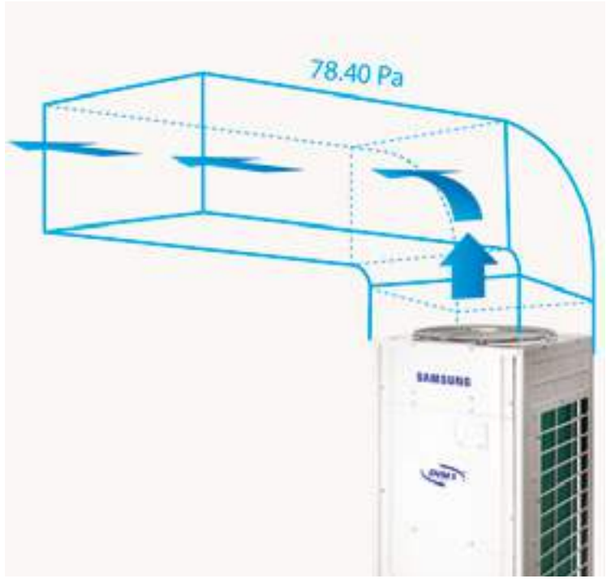





### Mode Control Unit

An indoor unit connects to a 3-pipe Heat Recovery outdoor unit, which heats and cools independently using a Mode Control Unit (MCU). MCUs are available in configurations ranging from 2 to 6 ports and can be piped together. This allows for up to 80 indoor unit connections to a single DVM S system (where specifications allow).

# Innovations in detail



## DVM S Eco

### High capacity in a compact design

DVM S Eco combines a high capacity up to 14 hp with a small footprint. It is one of the most compact air conditioner units in its class today, making the DVM S Eco very easy and economical to install and operate without compromising on performance. It leaves plenty of extra space that can be used for other purposes.

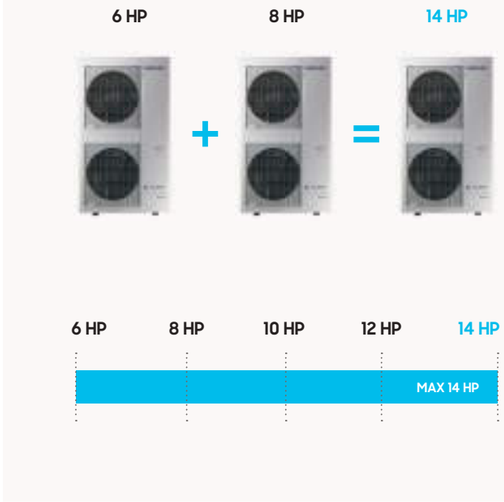


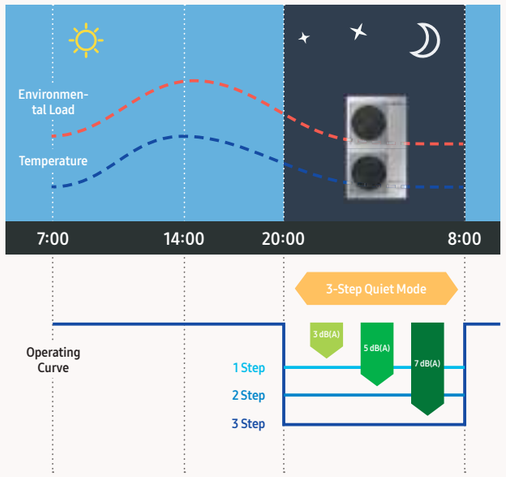


### Silent mode

By producing less noise than conventional models, the DVM S Eco imposes fewer distractions on residential and working environments. Its compact, unimposing design and specially shaped fan blades help reduce sound levels by up to 5 dB(A), creating
a more pleasant environment.

Additionally, its quiet operation during the night creates a restful environment with a reduced noise level of 2–7 dB(A).








## DVM S Water

### Optimal water flow controller

The DVM S Water comes with a built-in Water Flow Controller that helps control the amount of water used to cool and heat an outdoor unit. The optimum flow of water is automatically determined by the temperature of the indoor space, making for minimum energy consumption at optimum standards, at reduced costs. And because this feature is standard, there is no need for a separate water flow control kit.







### Geothermal applications

Using a highly efficient compressor and heat exchanger, DVM S Water gives an effective and reliable performance, despite any changes to its environment. DVM S Water uses water as a means of heat exchange, and can be connected to various sources such as cooling towers, boilers, geothermal loops, lakes, ponds, soil, seawater and more. Its long piping and lightweight design make it easy and economical to install almost anywhere.

# Innovations in detail





## Heat Recovery for DVM



### Compact heat recovery solution

The Heat Recovery (HR) feature for Samsung DVM S ECO and DVM S High EER is designed to control temperatures in multiple spaces at once. Optimised for small hotels and residential buildings, it can provide cooling and heating for up to 10 indoor units simultaneously.

An HR Changer is used to convert a DVM S Eco Heat Pump (4, 5 and 6 hp) to a Heat Recovery (HR) model, which can be connected to a multiport Mode Control Unit (MCU).

## HVM Chiller

### Modular Function

HVM Chiller heat pump outdoor units are available in three different sizes: 42/56/65 kW. A maximum of 16 outdoor units can be connected to achieve a maximum capacity of 1,040 kW. By connecting multiple units within a single system, the workload is adjusted automatically for maximum efficiency.

The HVM system's water-based concept eliminates the need for refrigerant inside the building, making it a safe solution. Its refrigerant charge is up to 65 % lower[1] than in traditional VRF systems.

[1] Compared to a Samsung DVM S 60 hp, holding R410A refrigerant, connected to twelve 14 kW indoor units and 100 metres of pipes.

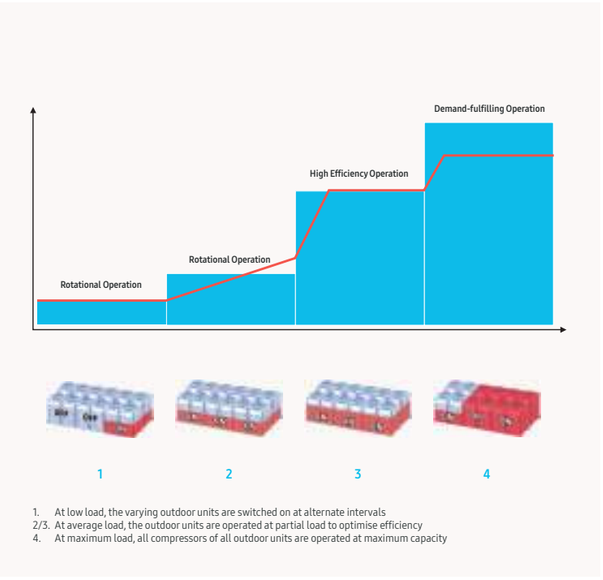


1. At low load, the varying outdoor units are switched on at alternate intervals
2/3. At average load, the outdoor units are operated at partial load to optimise efficiency
4. At maximum load, all compressors of all outdoor units are operated at maximum capacity




### Local and centralised controls

The DVM Chiller utilises the same integrated control systems as a VRF system, and can be connected to a third-party Building Management System (BMS). With the use of the Fan Coil Unit (FCU) kit, third-party indoor units and control systems can also be connected. The Samsung DMS 2.5 makes control and maintenance easy.





Introduction





# Slim Duct S

## Slim design for small ceiling spaces

The Slim Duct S is a slim 200 mm in width, making it much narrower than conventional products. This allows for easy installation and maintenance in all kinds of spaces.

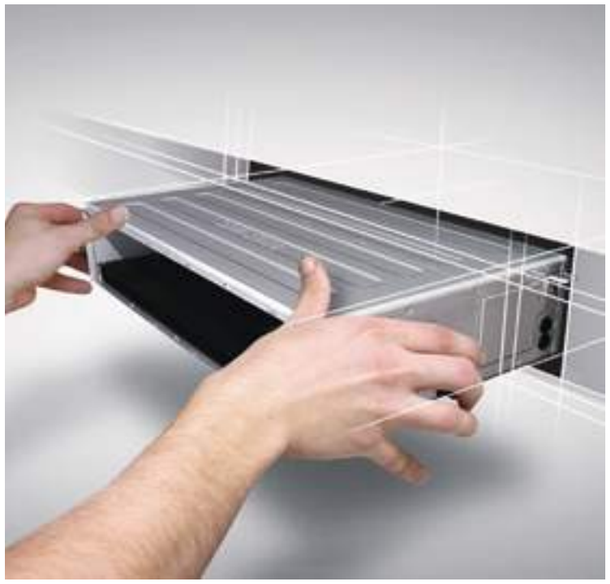



## Built-in drain pump

A check valve on the drain pump prevents drained water from flowing back into the drain pan, minimising the water level in the drain pan. This modern design feature means no water stagnation, and prevents drain water overflowing into your interiors.





Introduction

# Innovations in detail



## Duct S

### Flat microchannel heat evaporator/ condenser

Samsung's innovative FME/FMC technology provides increased efficiency compared with the conventional fin and tube type. These modern innovations have also enabled a reduction in the size of the unit.

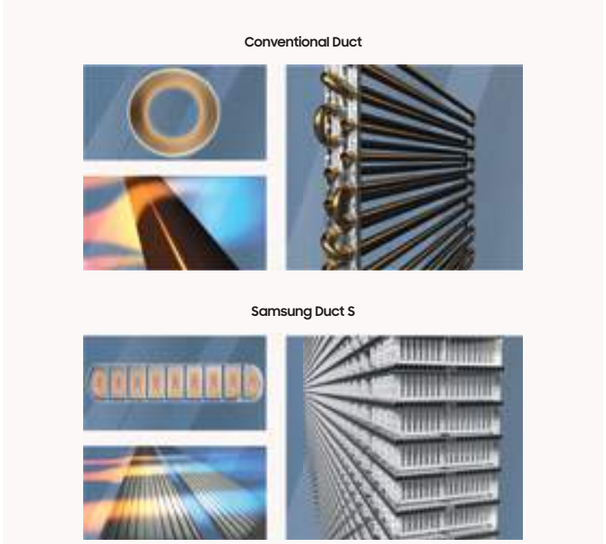


### Indoor discharge temperature

Each ducted indoor unit, or AHU kit, boasts a discharge air temperature control function that offers greater comfort without the need to change the outdoor unit setting. The MWR-WE13N remote control can be used to select and maintain the cooling or heating option, and works with all ducted/AHU connected systems.






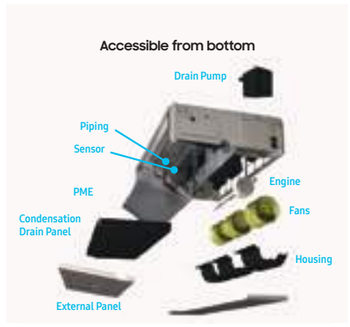


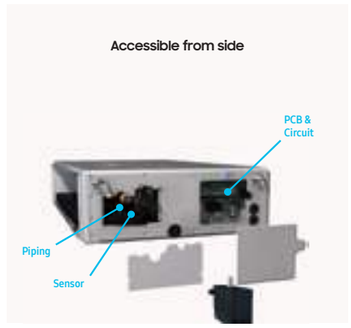


### Easy installation and maintenance

Thanks to their ultra-compact design, Samsung duct units can be placed anywhere, and can even be split into two parts (18/20/25 kW models). This makes for easy installation and maintenance. The indoor unit can be accessed from three directions: from the top, bottom and one side, making maintenance simpler than ever.

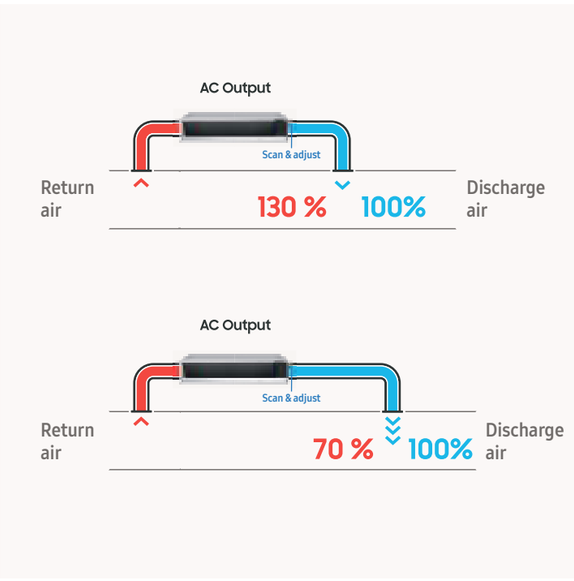


### Automatic ESP setting

The automatic operation of the external static pressure feature is very simple to set up.

This auto setting enables you to choose the optimal operating range for the fan. The result is the greatest possible comfort with an optimal balance between sound level and capacity. Please contact your Samsung representative to find out which indoor units feature this function.

# Innovations in detail



## Wind-Free™ Wall-Mounted

### Fast Cooling

Samsung wall-mounted air conditioners with Wind-Free™ technology cool quickly from corner to corner, making people comfortable whenever they want and wherever they are. Powerboost with Digital Inverter TT (Twin Tube) technology dramatically shortens the time it takes for the compressor to reach maximum power when it starts operating, so it cools the air 43 % faster[1]. Its advanced design also features a 15 % larger fan, 18 % wider inlet and a 31 % wider blade than conventional models. This means that cool air is dispersed farther and wider into every corner of a room, reaching up to 15 metres[2].

[1] Tested on the AR12TXCAAWKEU model compared with the Samsung conventional model AQ12EASER under specific testing conditions and may vary depending on environmental factors and use.
[2] Tested on the AR24TXFCAWKNEU model under specific testing conditions and may vary depending on environmental factors and use.

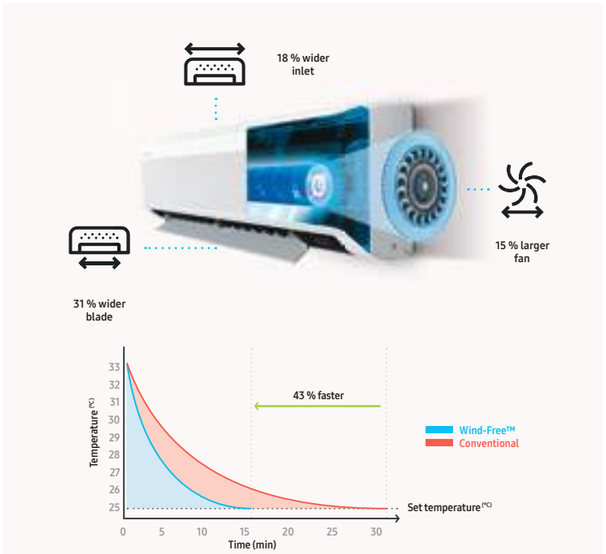


### AI Auto Comfort

AI Auto Comfort introduces residents to the experience of intelligent climate control[1]. To make life simpler and more efficient, it automatically optimises the various modes by analysing room conditions and usage patterns[2]. Based on users' preferred temperature and the outside temperature, it automatically switches to the most appropriate mode, including Wind-Free™, Fast and Normal Cooling, to maintain optimal, comfortable room conditions.

[1] AI = Artificial Intelligence. A Wi-Fi connection and Samsung SmartThings application account are required.
[2] Stores user data, preferences and usage patterns, enabling it to suggest the most useful options.

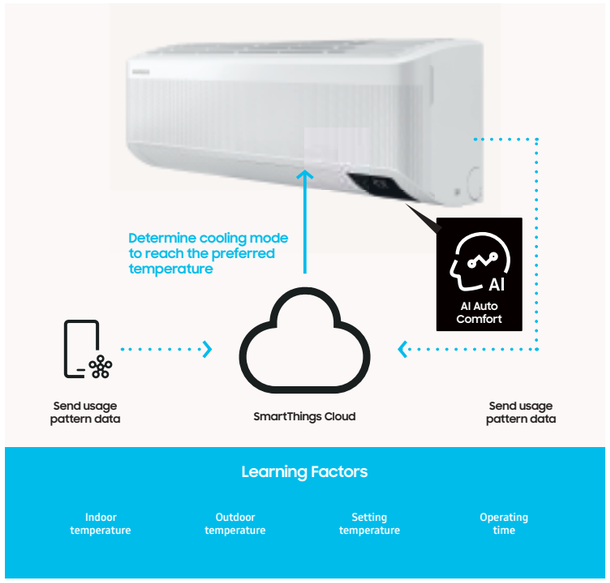


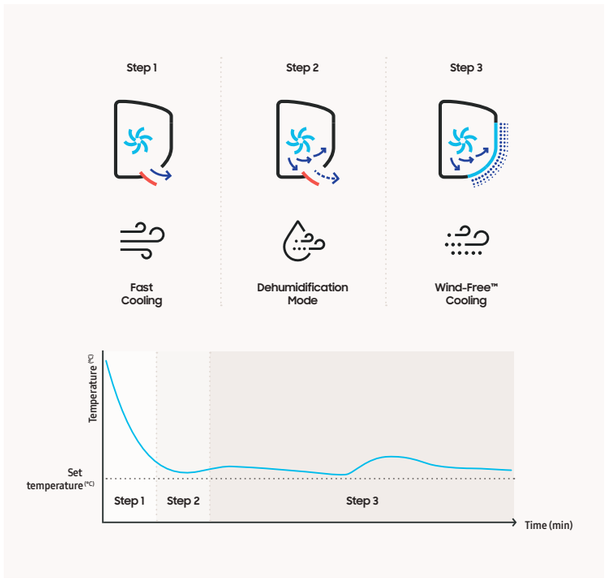


### Wind-Free™ Cooling

Wind-Free™ Cooling mode keeps the room comfortably cool. It cools gently and quietly, dispersing air through 23,000 micro-holes so that people never have to deal with the unpleasant feeling of a cold draft on their skin. This results in a "Still Air" environment[1] with a very low air speed and limited noise[2]. The advanced airflow structure of this mode also means that it cools a wider and larger area more evenly. And it consumes 77 % less energy than Fast Cooling mode[3], so people can stay comfortably cool while reducing energy costs.

[1] ASHRAE (the American Society of Heating, Refrigerating, and Air-Conditioning Engineers) defines "Still Air" as air currents moving at speeds below 0.15 m/s, with no cold drafts.
[2] Tested on the AR12TXCAAWKNEU model in an anechoic environment. Wind-Free™ mode generates 23 dB(A) of noise, compared to 26 dB(A) produced by the conventional Samsung model. Sound pressure level is a relative value, depending on the distance and acoustic environment. Sound pressure level may differ according to operating conditions.
[3] Tested on the AR12TVEAAWKNAP model under specific testing conditions, based on the power consumption of Fast Cooling mode vs. Wind-Free™ Cooling mode.

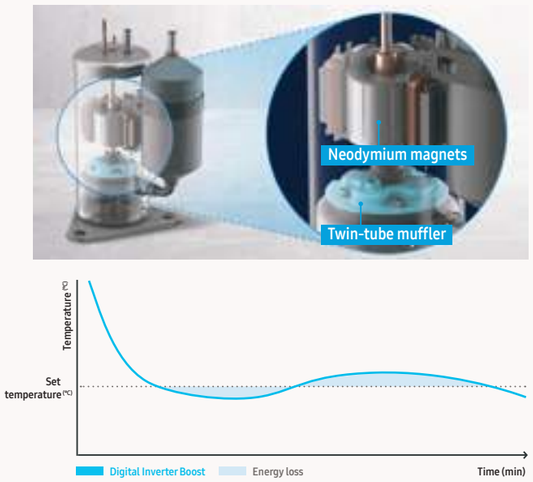


### Digital Inverter Boost

Samsung's compressor with Digital Inverter Boost technology helps to save on energy consumption. Unlike conventional fixed-speed compressors, it maintains the desired temperature without frequently turning off and on, resulting in less fluctuation. As it's equipped with strong neodymium magnets and a muffler, it works efficiently and produces less noise and vibration than conventional models. When cooling, it optimises power usage and therefore reduces energy consumption by up to 5 %[1].

[1] Tested on the AR09TXCAAWKNEU model compared with the previous Samsung Wind-Free™ model AR09NXCXAWKNEU.

# Innovations in detail



## 360 Cassette

### Circular airflow

Unlike traditional 4-Way Cassette units[1], which create areas of uneven airflow[2], the 360 Cassette ensures that cool air reaches every single corner. Its circular outlet blows cool air in every direction. The bladeless design keeps things comfortably cool without creating a cold draft[3], and without blades blocking the airflow, it sends 25 % more air even further[1].

[1] Samsung testing compares the 360 Cassette to a conventional 4-Way cassette type air conditioner.
[2] The temperature difference is less than 0.6 °C within a 9.3 m radius.
[3] No cold draft between 0–1.5 m in height (with a 14.0 kW indoor unit) within a 5 m radius.

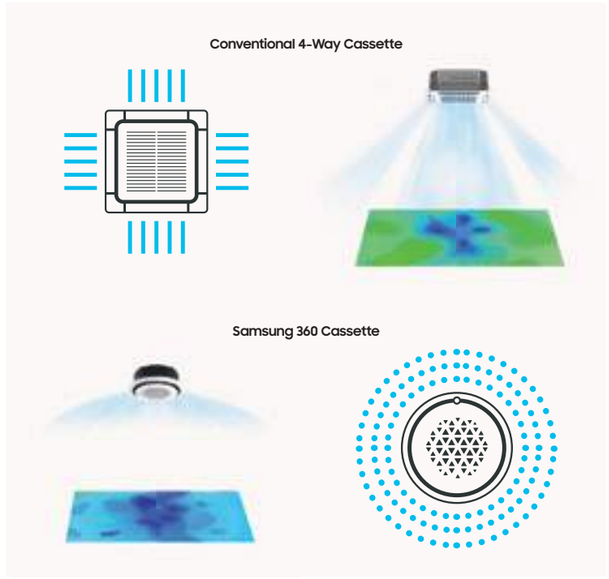


### LED display

The unit features a stylish panel and an intuitive LED display. This allows users to choose and change the direction of airflow. Users have a choice of settings, and controlling the air in an individual zone is easy.

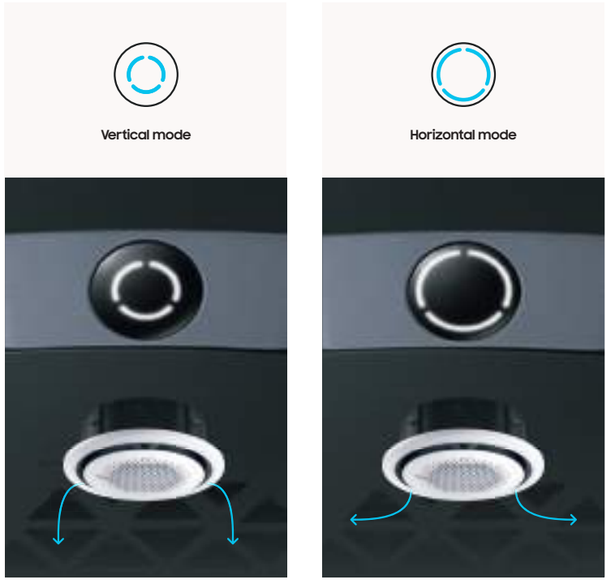





### Airflow control

The air supply is easily adjusted without the use of flaps. Three booster fans alter the direction of airflow from within the cassette's hollow space. A rain-like distribution of air (known as the 'Coandă' effect) keeps the room cool and comfortable at all times.



### Stylish design

The 360 Cassette adds a touch of style to any room. It comes in black or white, in a square or circular design, and can be fitted into the ceiling or exposed on the surface of any material. It suits any type of background, from wood to concrete and wallpaper to paint.

# Innovations in detail



## Wind-Free™ 4-Way Cassette

### Wind-Free™ technology

Wind-Free™ Cooling is some of Samsung's most advanced technology. The Wind-Free™ 4-Way Cassette directs air through 15,700 micro-holes in the panel, while the small chassis Wind-Free™ Cassette directs air through 9,000 micro-holes in the panel. These micro-holes are essential for creating a type of airflow called "Still Air"[1], which cools the room gradually and noticeably without drafts.

[1] ASHRAE (the American Society of Heating, Refrigeration, and Air-Conditioning Engineers) defines "Still Air" as air currents moving at speeds below 0.15 m/s, with no cold drafts.




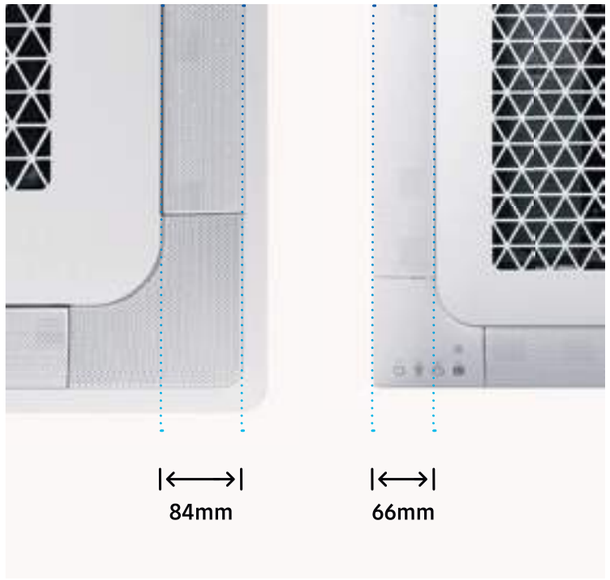


### Optimised blades

The larger and optimised blades[1] enable a wider cooling range and improved air circulation within the room. This advanced technology also cools the space much faster, leaving no zone untouched.

[1] Samsung testing compares the Wind-Free™ 4-Way to a conventional 4-Way Cassette type air conditioner.

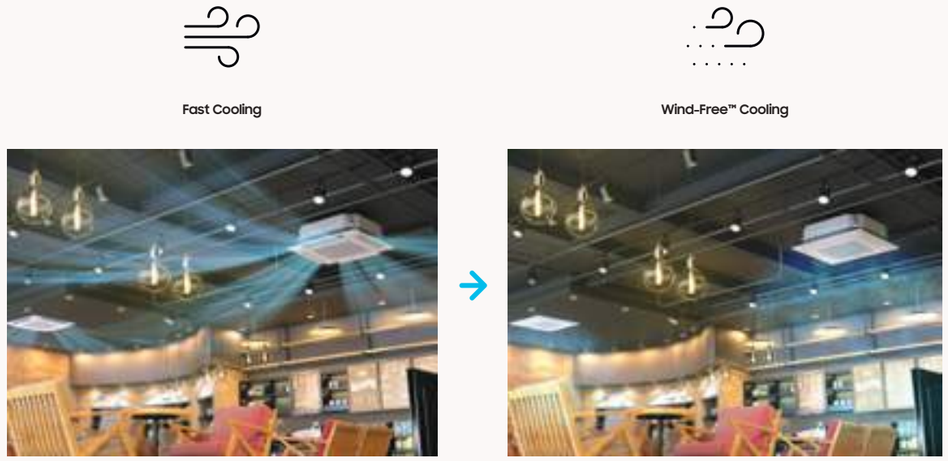


### Smart Comfort Operation

The Wind-Free™ 4-Way Cassette boasts Smart Comfort Operation. The Fast Cooling process helps to achieve the desired temperature in a room quickly. By simultaneously detecting the humidity levels, the Smart Comfort Operation feature maintains the room's temperature automatically.

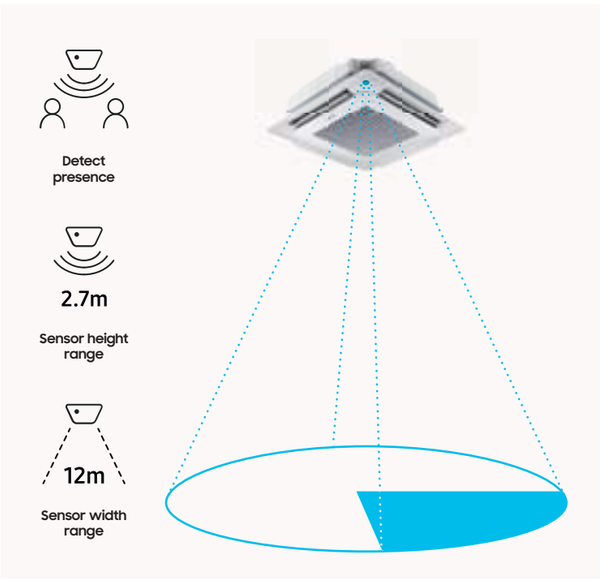


### Motion Detect Sensor (optional)

The improved Motion Detect Sensor (MDS) detects the presence and location of people in the room, enabling automatic management of airflow direction and efficient air cooling.





Introduction

# Innovations in detail



## Wind-Free™ 1-Way Cassette

### Wind-Free™ technology

Wind-Free™ Cooling is some of Samsung's most advanced technology. The Wind-Free™ 1-Way Cassette directs air through tiny holes in the panel, dispersing a gentle flow of air. These 13,000 micro-holes are essential for creating a type of airflow called "Still Air"[1], which cools the room gradually and noticeably without drafts.

[1] ASHRAE (the American Society of Heating, Refrigeration, and Air-Conditioning Engineers) defines "Still Air" as air currents moving at speeds below 0.15 m/s, with no cold drafts.



Wind-Free™ 1-Way Cassette

13,000 micro-holes







### Slim installation/small footprint

At a height of only 152 mm[1], the Wind-Free™ 1-Way Cassette is a compact and lightweight device (8-13.5 kg[2]). This slim design makes it not only visually pleasing, but also easier to install and maintain, and it can be fitted into small gaps or ceilings.

[1] Up to 3.6 kW, larger models measure 155 mm.
[2] 1.7 kW and 2.2 kW models weigh 8 kg. The 5.6 kW and 7.1 kW models weigh 13.5 kg.

### Wider cooling range

The larger, optimised blade[1] works to cool a larger area much faster. Its sleek design can deliver cool air efficiently, rapidly and evenly over an area of up to 8 m[2], leaving no zone untouched.

[1] Samsung testing compares the Wind-Free™ 1-Way Cassette to a conventional 1-Way Cassette type air conditioner.
[2] Based on the 7.1 kW indoor unit.





Introduction

# Innovations in detail



## ERV (Plus)

### Smart cooling - auto mode

To conserve energy and remain cost-effective, the ERV and ERV Plus (for DVM) both automatically change operation modes depending on the indoor and outdoor temperatures. The ERV Plus (DVM only) is equipped with a direct expansion coil, which brings fresh outside air through the DX coil and into your space. It heats or cools, and can keep rooms at your desired temperature.

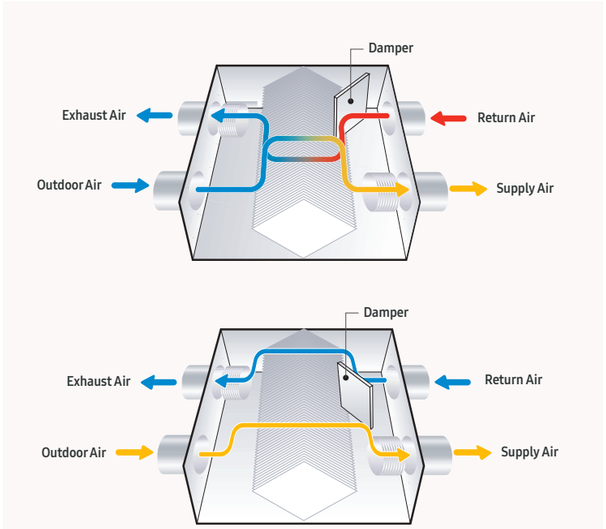


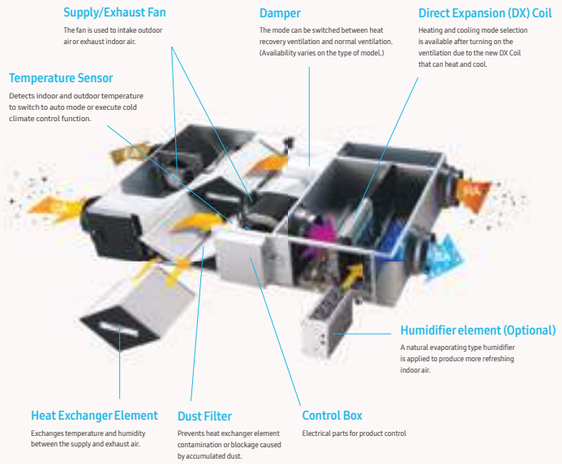


### Fresh air and humidity

The ERV sends fresh air into a room automatically by detecting $CO_2$ with the $CO_2$ sensor[1] (optional). An optional humidifier helps maintain a perfect indoor humidity level[1]. The Samsung humidifier kit balances moisture levels effectively, and the ERV's self-cleaning function sprays water from the top of the device upon operation, preventing any offensive odours caused by particle accumulation.

[1] $CO_2$ sensor and humidifier must be purchased separately.

## Air Handling Unit (AHU) Kit

### Connect to third-party air handling units

The Samsung AHU kit allows the connection of DVM S outdoor units to third-party air handling units (AHUs)[1]. With this kit you can supply heating or cooling to a DX coil in the AHU. This is a cost-effective and efficient way to provide fresh air to the building at the correct temperature. The unit improves performance and efficiency and is cost-effective.

**Features include:**

- IP54 waterproof certification (for MXD type AHU kit only)
- Variable capacity
- 2.5 hp–40 hp
- Simple BMS application (0–10 V, MXD-K/X Series)
- Discharge air temperature control and outdoor capacity control

[1] Please contact your local Samsung representative for more information.

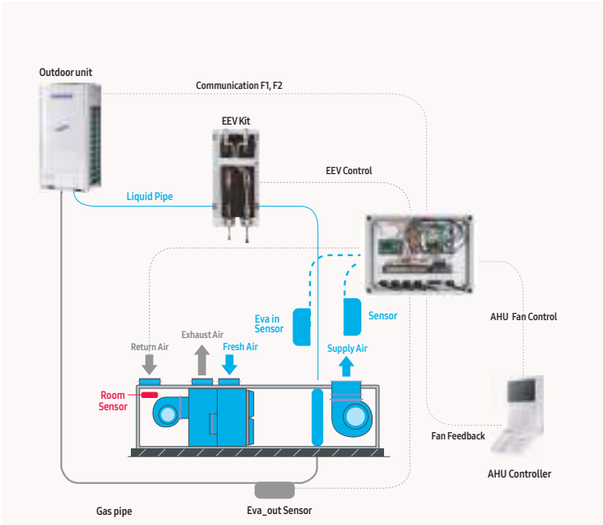

# Innovations in detail

## b.IoT

Samsung b.IoT (building Internet of Things) is a building management solution that can efficiently manage and save energy. It is an open platform with expandability and compatibility options that enable integrated control of the facility's major systems, such as VRF and third-party party devices via BACnet interface.

### Samsung b.IoT helps to ensure:

- Efficient installation periods
- Reductions in installation and operation costs
- Optimal energy efficiency
- Efficient management of integrated systems installed in the building - VRF

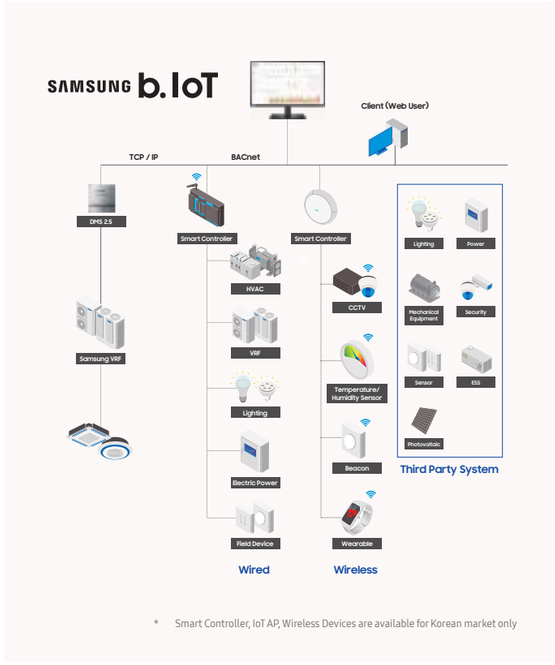


* Smart Controller, IoT AP, Wireless Devices are available for Korean market only

### Easy and smart operation

- Optimal operation for Samsung VRF (DVM) products
- Intuitive Graphic UI & convenient rules editor for various solutions
- Trends & alarm lookup





### Effective energy usage management

- Energy usage analysis
- Hybrid (HVAC+VRF) energy consumption distribution

## Samsung b.IoT provides:




### Open platform

- Supports Open Protocol (BACnet) and API for integration of various devices
- Integrates various sensors and devices wirelessly via IoT gateway

### Intelligent energy saving algorithms

- Data-Based Comfort Control – Comfort based on user-specific algorithms
- Learning-Based Control – Optimised control by artificial intelligence (AI)
- Occupancy-Based Control – Lighting, humidity & temperature
- Inefficient Operation Detection – Time, space & temperature

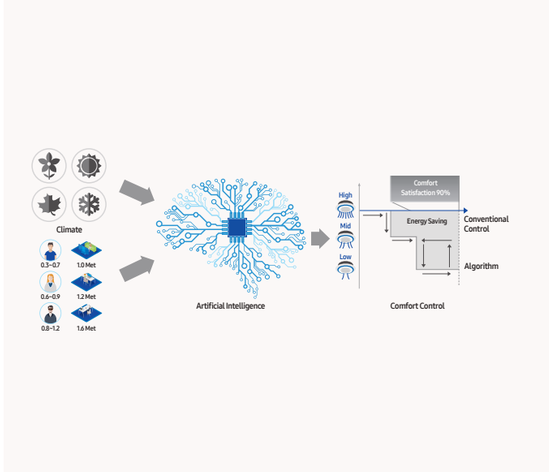






Introduction

# VRF

# Line-up outdoor

| Model | | Image | Capacity (hp) | | | | | | | | | | | | | |
|---|---|---|---|---|---|---|---|---|---|---|---|---|---|---|---|---|
| | | | 4 | 5 | 6 | 8 | 10 | 12 | 14 | 16 | 18 | 20 | 22 | 24 | 26 | 30 |
| Heat Pump | DVM S Eco Heat Pump |  | ● | ● | | ● | ● | ● | ● | | | | | | | |
| | DVM S Essential Heat Pump (2-Pipe) |  | | | | | ● | ● | ● | ● | ● | | | | | |
| | DVM S Standard Heat Pump (2-Pipe) |  | | | | ● | ● | ● | ● | ● | ● | ● | ● | ● | ● | |
| | DVM S High EER Heat Pump (2-Pipe) |  | | | | ● | ● | ● | ● | ● | ● | ● | ● | ● | ● | |
| Heat Recovery | DVM S Eco Heat Recovery (With Heat Recovery Changer Kit) |  | ● | ● | ● | | | | | | | | | | | |
| | DVM S High EER Heat Recovery (3-Pipe) |  | | | | ● | ● | ● | ● | ● | ● | ● | ● | ● | ● | |
| Water to Air/Water | DVM S Water |  | | | | ● | ● | ● | | | | ● | | | | ● |





# Line-up indoor

| Model | Image | Capacity (kW) | | | | | | | | | |
|---|---|---|---|---|---|---|---|---|---|---|---|
| | | 1.1 | 1.7 | 2.2 | 2.8 | 3.2 | 3.6 | 4.5 | 5.6 | 6.0 | 7.1 |
| Wind-Free™ 1-Way Cassette |  | • | | • | • | | • | • | • | | • |
| Wind-Free™ 4-Way Cassette |  | • | | • | • | | • | • | • | | • |
| 360 Cassette |  | | | | | | | • | • | | • |
| Duct S |  | | | | | | • | • | • | | • |
| MSP Duct |  | | | • | • | | • | • | • | | • |
| LSP Slim Duct |  | | • | • | • | | • | • | • | | • |
| HSP Duct |  | | | | | | | | | | |
| Big Duct |  | | | | | | | | | | |
| Console |  | | | • | • | | • | • | • | | |
| Ceiling |  | | | | | | | | • | | • |
| Concealed Floor-Standing |  | | | | | | • | | • | | • |
| Packaged Floor-Standing |  | | | | | | | | | | |
| Boracay Wall-Mounted (EEV included) |  | • | | • | • | | • | • | • | | • |
| Boracay Wall-Mounted (EEV excluded) |  | • | | • | • | | • | • | • | | • |
| AR5000 Wall-Mounted (EEV included) |  | • | | • | • | | • | • | • | | • |
| Max Wall-Mounted |  | | | | | | | | | | |
| Hydro Unit HE |  | | | | | | | | | | |
| Hydro Unit HT |  | | | | | | | | | | |

| Capacity (kW) | | | | | | | | | | | |
|---|---|---|---|---|---|---|---|---|---|---|---|
| 8.2 | 6.0 | 11.2 | 12.8 | 14.0 | 16.0 | 18.0 | 20.0 | 22.0 | 25.0 | 28.0 | 32.0 | 50.0 |
| | • | • | • | • | | | | | | | | |
| | • | • | • | • | | | | | | | | |
| | • | • | • | • | | | | | | | | |
| | • | • | | | | | | | | | | |
| | • | • | • | • | | | | | | | | |
| | | • | • | • | | | | • | | • | | |
| | | | | | | | | • | | | | |
| | | | | | | | | | | | | |
| | | • | | • | | | | | | | | |
| | | | | • | | | | | | • | | |
| • | | | | | | | | | | | | |
| | | | | | • | | | | | | • | • |
| | | | | | • | | | | • | | | |

NOTE
- Make sure to use an indoor unit that is compatible with DVM S.
- Indoor units can be connected within the range indicated in the following table.
- If the total capacity of the connected indoor units exceeds the indicated maximum capacity, the cooling and heating capacity of the indoor unit may decrease.
- The total allowable capacity of the connected indoor units can be from 50 % to 130 % of the total outdoor unit capacity. 0.5 × Σ (Outdoor unit capacity) ≤ Total capacity of the connected indoor units ≤ 1.3 × Σ (Outdoor unit capacity).

VRF

# Selection guide

| | | Heat Pump | | | | | Heat Recovery | | | | |
|---|---|---|---|---|---|---|---|---|---|---|---|
| | |  |  |  |  |  |  |  |  | | |
| Model | | DVM S Eco<br>AM***KXMDEH/EU<br>AM***MXMDEH/EU | DVM S Eco<br>AM***FXMDGH/EU<br>AM***KXMDGH/EU | DVM S Essential<br>AM***MXVDGH/ET | DVM S Standard<br>AM***JXVAGH/ET<br>AM***KXVAGH/ET | DVM S High EER<br>AM***JXVHGH/ET<br>AM***KXVGGH/ET | DVM S Eco<br>AM***NXMDER/EU<br>AM***NXMDGR/EU | DVM S High EER<br>AM***JXVHGH/ET<br>AM***MXVGNRH/ET | DVM S Water<br>AM***MXWANR/EU<br>AM***KXWANR/EU | | |
| Type | Heat Pump | ● | ● | ● | ● | ● | ●[1] | | ●[1] | | |
| | Heat Recovery | | | | | | ● | ● | ● | | |
| | Capacity range | 4–8 hp | 6–14 hp | 10–40 hp | 8–80 hp | 8–80 hp | 4–6 hp | 8–80 hp | 8–90 hp | | |
| Connectablility | Standard Cassette | ● | ● | ● | ● | ● | ● | ● | ● | | |
| | Wind-Free™ Cassette | ● | ● | ● | ● | ● | ● | ● | ● | | |
| | 360 Cassette | ● | ● | ● | ● | ● | ● | ● | ● | | |
| | LSP Duct | ● | ● | ● | ● | ● | ● | ● | ● | | |
| | MSP Duct | ● | ● | ● | ● | ● | ● | ● | ● | | |
| | HSP Duct | ● | ● | ● | ● | ● | ● | ● | ● | | |
| | Wall-Mounted | ● | ● | ● | ● | ● | ● | ● | ● | | |
| | Floor-Standing/Concealed/Ceiling | ● | ● | ● | ● | ● | ● | ● | ● | | |
| | ERV Plus | ● | ● | ● | ● | ● | ● | ● | ● | | |
| | Hydro unit HE/HT | ● | ● | ● | ● | ● | ● | ● | ● | | |
| | MCU Kit | | | | | | ● | ● | ● | | |
| | AHU Kit | ● | ● | ● | ● | ● | ● | ● | ● | | |
| Features | Refrigerant check mode | ● | ● | ● | ● | ● | ● | ● | ● | | |
| | Simultaneous cooling and heating | | | | | | ● | ● | ● | | |
| | 7-Segment display | ● | ● | ● | ● | ● | ● | ● | ● | | |
| | Four-way direction piping connection | ● | ● | | | | ● | | | | |
| | Flash vapour injection | | | | ● | ● | | ● | ● | | |
| | Heating @ -25 °C | | ● | | ● | ● | ● | ● | | | |
| | Intelligent defrost | | | ● | ● | ● | | ● | | | |
| | Improved fan diffuser | | | | ● | ● | | ● | | | |
| | Reduced air flow noise | | | | ● | ● | | ● | | | |
| | Leak detection (pump down function) | | | ● | ● | ● | | ● | | | |
| | Night silent mode | ● | ● | ● | ● | ● | ● | ● | | | |
| | Variable Refrigerant Temperature | ● | ● | ● | ● | ● | ● | ● | ● | | |
| | Inverter scroll compressor | | ● | ● | ● | ● | | ● | ● | | |
| | Twin BLDC rotary compressor | ● | | | | | ● | | | | |
| | DC fan motor | ● | ● | ● | ● | ● | ● | ● | | | |
| | Refrigerant type | R410A | R410A | R410A | R410A | R410A | R410A | R410A | R410A | | |
| Smart Protection Technology | Adaptive Sine Wave | ● | ● | ● | ● | ● | ● | ● | | | |
| | Refrigerant cooled PCB | | | ● | ● | ● | | ● | ● | | |
| | Resonance Avoidance Technology | ● | ● | ● | ● | ● | ● | ● | ● | | |

[1] Can be connected as a 2-pipe system.





VRF

# Selection guide

## Cassette



| Model | | Wind-Free™ 1-Way Cassette | Wind-Free™ 4-Way Cassette | 360 Cassette |
|---|---|---|---|---|
| Airflow | Wind-Free™ Cooling | ● | ● | |
| | 360 Degree Air Supply | | | ● |
| Air Purification | SPi Ioniser | Optional | Optional | Optional |
| | Air Filter | | | |
| Functions | Compatible with Samsung SmartThings | ● | ● | ● |
| | Compatible with Wi-Fi Kit | ● | ● | ● |
| | Humidity Sensor | ● | ● | |
| | MDS (Motion Detect Sensor) | | ● | |
| | Automatic ESP Setting | | | |
| | Quiet Mode | | | |
| Controls | Wireless remote controller included | | | |
| Others | EEV included | ● | ● | ● |
| | Built-In Drain Pump | ● | ● | ● |

## Duct



| Duct S | LSP Duct | MSP Duct | HSP Duct | Big Duct |
|---|---|---|---|---|
| | | | | |
| | | | | |
| Optional | | | | |
| ● | ● | ● | ● | ● |
| ● | ● | ● | ● | ● |
| ● | ● | ● | ● | ● |
| | | | | |
| | | | | |
| ● | | | ● | |
| | | | | |
| | | | | |
| ● | ● | ● | ● | ● |
| | Model-specific | Model-specific | Model-specific | Optional |

## Others



| Model | | Console | Floor/Ceiling | Big Ceiling | Concealed Floor-Standing | Packaged Floor-Standing |
|---|---|---|---|---|---|---|
| Airflow | Wind-Free™ Cooling | | | | | |
| | 360 Degree Air Supply | | | | | |
| Air Purification | SPi Ioniser | ● | | | | |
| | Air Filter | ●[1] | ● | ● | ● | ● |
| Functions | Compatible with Samsung SmartThings | ● | ● | ● | ● | ● |
| | Compatible with Wi-Fi Kit | ● | ● | ● | ● | ● |
| | Humidity Sensor | | | | | |
| | MDS (Motion Detect Sensor) | | | | | |
| | Automatic ESP Setting | | | | | |
| | Quiet Mode | | | | ● | |
| Controls | Wireless remote controller included | ● | | | | |
| Others | EEV included | ● | | ● | ● | ● |
| | Built-In Drain Pump | | | | | |

## Others



| Hydro Unit HE | Hydro Unit HT |
|---|---|
| | |
| | |
| | |
| | |
| ● | ● |
| ● | ● |
| | |
| | |
| | |
| | |
| | ● |
| ● | ● |
| | |

## Wall-Mounted



| Boracay Wall-Mounted | AR5000 Wall-Mounted | Max Wall-Mounted |
|---|---|---|
| | | |
| | | |
| | | |
| | | |
| ● | ● | ● |
| ● | ● | ● |
| | | |
| | | |
| | | |
| | | |
| | ● | |
| Model-specific | Model-specific | ● |
| | | |

[1] Subject to the exact model.





VRF

VRF

# Nomenclature

## Indoor units

| AM | 045 | N | N | 4 | D | E | H |
|---|---|---|---|---|---|---|---|
| 1 | 2 | 3 | 4 | 5 | 6 | 7 | 8 |

| | | | |
|---|---|---|---|
| 1 | **Classification** | **AM** | VRF |
| | | **AN** | Ventilation (ERV) |
| 2 | **Capacity** | | **x1/10 hp DVM (3 digits)** |
| 3 | **Version** | **F** | 2013 |
| | | **H** | 2014 |
| | | **J** | 2015 |
| | | **K** | 2016 |
| | | **M** | 2017 |
| | | **N** | 2018 |
| | | **R** | 2019 |
| | | **T** | 2020 |
| 4 | **Product Type** | **N** | Indoor Unit (NASA) |
| | | **S** | ERV |
| 5 | **Product Notation** | **"1"** | Wind-Free™ 1-Way Cassette |
| | | **"2"** | 2-Way Cassette |
| | | **"4"** | 360 Cassette & Wind-Free™ 4-Way Cassette |
| | | **N** | Small chassis Wind-Free™ 4-Way Cassette |
| | | **L** | Low Static Pressure Duct (Slim Duct) |
| | | **M** | Medium Static Pressure Duct |
| | | **H** | High Static Pressure Duct |
| | | **E** | Outdoor Air Processing Duct |
| | | **C** | Ceiling |
| | | **J** | Console |
| | | **F** | Floor-Standing |
| | | **P** | Packaged Floor-Standing |
| | | **T** | Boracay Wall-Mounted without EEV |
| | | **Q** | Boracay Wall-Mounted (EEV) |
| | | **V** | AR5000 Wall-Mounted (EEV) |
| | | **B** | Hydro Unit |
| | | **K** | ERV (Plus) |
| | | **W** | DVM S Water |
| 6 | **Feature** | **F** | Flagship |
| | | **P** | Premium |
| | | **D** | Deluxe |
| | | **S** | Standard |
| 7 | **Voltage Rating** | **E** | 1Φ, 220~240 V, 50 Hz |
| | | **K** | 1Φ, 220~240 V, 50/60 Hz |
| | | **G** | 3Φ, 220~240 V, 50 Hz |
| 8 | **Mode** | **H** | Heat Pump (R410A) |
| | | **B** | Heat Pump (R134A) |
| | | **N** | ERV |

## Outdoor units

| AM | 080 | K | X | V | A | G | H |
|---|---|---|---|---|---|---|---|
| 1 | 2 | 3 | 4 | 5 | 6 | 7 | 8 |

| | | | |
|---|---|---|---|
| 1 | **Classification** | **AM** | VRF |
| 2 | **Capacity** | | **x1/10 hp DVM (3 digits)** |
| 3 | **Version** | **F** | 2013 |
| | | **H** | 2014 |
| | | **J** | 2015 |
| | | **K** | 2016 |
| | | **M** | 2017 |
| | | **N** | 2018 |
| | | **R** | 2019 |
| | | **T** | 2020 |
| 4 | **Product Type** | **X** | DVM S |
| 5 | **Product Notation** | **V** | DVM S Essential/Standard/High EER |
| | | **W** | DVM S Water |
| | | **M** | DVM S Eco |
| 6 | **Feature** | **A** | Standard + General Temperature + Module |
| | | **H** | High EER + Low Temperature + Module |
| | | **G** | High EER + General Temperature + Module |
| | | **D** | Standard + General Temperature + Non-Module |
| 7 | **Voltage Rating** | **E** | 1Φ, 220~240 V, 50 Hz |
| | | **G** | 3Φ, 380~415 V, 50 Hz |
| | | **N** | 3Φ, 380~415 V, 50/60 Hz |
| 8 | **Mode** | **H** | Heat Pump |
| | | **R** | Heat Recovery |





VRF

# Specifications

## DVM S Eco Heat Pump

- Horizontal discharge and rear suction by means of one (4~5 hp) or two (8~14 hp) propeller BLDC Inverter fan(s).
- Each module houses one compressor: Twin BLDC Rotatory (4~8 hp) or Inverter Scroll with Flash Injection technology (10~14 hp).
- Compressor micro frequency control with 0.01 Hz step.
- Night Silent Mode available.
- Eurovent certified and ErP (Ecodesign) compliant.
- Four-way direction piping connection.









| Model Name | | | | AM040KXMDEH/EU | AM050KXMDEH/EU | AM080MXMDGH/EU | AM080FXMDGH/EU | AM100KXMDGH/EU | AM120KXMDGH/EU | AM140KXMDGH/EU |
|---|---|---|---|---|---|---|---|---|---|---|
| Power Supply | | | Φ, #, V, Hz | 1Φ, 2, 220~240 V, 50 Hz | 1Φ, 2, 220~240 V, 50 Hz | 3Φ, 4, 380~415 V, 50 Hz | 3Φ, 4, 380~415 V, 50 Hz | 3Φ, 4, 380~415 V, 50 Hz | 3Φ, 4, 380~415 V, 50 Hz | 3Φ, 4, 380~415 V, 50 Hz |
| Performance | hp | | hp | 4 | 5 | 8 | 8 | 10 | 12 | 14 |
| | Capacity | Cooling | kW | 12.1 | 14.0 | 22.4 | 22.4 | 28.0 | 33.5 | 40.0 |
| | | Heating | kW | 12.1 | 14.0 | 22.4 | 25.0 | 31.5 | 37.5 | 45.0 |
| | Maximum number of connectable indoor units | | ea | 6.0 | 8.0 | 13.0 | 13.0 | 18.0 | 21.0 | 26.0 |
| | Total capacity of the connected indoor units | Min. | kW | 5.6 | 7.0 | 11.2 | 11.2 | 14.0 | 16.8 | 20.0 |
| | | Max. | kW | 15.7 | 18.2 | 29.1 | 29.1 | 36.4 | 43.6 | 52.0 |
| Power | Power Input | Cooling | kW | 3.60 | 4.00 | 6.90 | 5.72 | 7.29 | 8.77 | 10.59 |
| | | Heating | | 2.90 | 3.40 | 5.80 | 4.88 | 6.74 | 7.81 | 9.88 |
| | Current Input | Cooling | A | 17.50 | 19.50 | 11.70 | 9.66 | 11.51 | 13.74 | 16.48 |
| | | Heating | | 14.00 | 16.50 | 9.50 | 8.24 | 10.58 | 12.23 | 15.55 |
| | Current | Minimum SSC value | MVA | - | - | 3.4 | 3.4 | 4.6 | 5.1 | 5.9 |
| | | MCA | A | 24.0 | 27.0 | 18.4 | 18.0 | 21.5 | 23.5 | 32.0 |
| | | MFA | A | 32 | 40 | 25 | 25 | 30 | 30 | 40 |
| Energy Efficiency[1] | EER | Cooling | W/W | 3.36 | 3.50 | 3.25 | 3.92 | 3.84 | 3.82 | 3.78 |
| | COP[1] | Heating | W/W | 4.17 | 4.12 | 3.86 | 5.12 | 4.67 | 4.79 | 4.55 |
| | ESEER | | W/W | 7.25 | 6.71 | 7.46 | 9.22 | 7.09 | 6.94 | 6.83 |
| Compressor | Type | | - | Twin BLDC Rotary | Twin BLDC Rotary | Twin BLDC Rotary | Inverter Scroll | Inverter Scroll | Inverter Scroll | Inverter Scroll |
| | Output | | kW × n | 4.12 | 4.12 | 4.92 x 1 | 4.96 x 1 | 5.18 x 1 | 6.39 x 1 | 6.76 x 1 |
| | Oil | Type | - | PVE | PVE | PVE | PVE | PVE | PVE | PVE |
| | | Initial Charge | cc | 1,700 | 1,700 | 1,700 | 2,800 | 2,300 | 2,300 | 2,300 |
| Fan | Type & Discharge direction | | - | Propeller | Propeller | Propeller | Propeller | Propeller | Propeller | Propeller |
| | | | - | Horizontal | Horizontal | Horizontal | Horizontal | Horizontal | Horizontal | Horizontal |
| | Number of Fans | | - | 1 | 1 | 2 | 2 | 2 | 2 | 2 |
| | Airflow Rate | | m³/min | 64 | 70 | 135 | 135 | 165 | 166 | 180 |
| | | | l/s | 1067 | 1167 | 2250 | 2250 | 2750 | 2766.67 | 3000 |
| | External Static Pressure | Max. | mmAq | 3.00 | 3.00 | 3.00 | 3.00 | 3.00 | 3.00 | 3.00 |
| | | | Pa | 29.40 | 29.40 | 29.40 | 29.40 | 29.40 | 29.40 | 29.40 |
| Fan Motor | Model | | - | BLDC Motor | BLDC Motor | BLDC Motor | BLDC Motor | BLDC Motor | BLDC Motor | BLDC Motor |
| | Output x n | | W | 125 x 1 | 139 x 1 | 139 x 2 | 139 x 2 | 244 x 2 | 244 x 2 | 244 x 2 |
| Piping Connections | Liquid Pipe | | ø, mm | 9.52 | 9.52 | 9.52 | 9.52 | 9.52 | 12.7 | 12.7 |
| | | | ø, inch | 3/8 | 3/8 | 3/8 | 3/8 | 3/8 | 1/2 | 1/2 |
| | Gas Pipe | | ø, mm | 15.88 | 15.88 | 19.05 | 19.05 | 22.22 | 28.58 | 28.58 |
| | | | ø, inch | 5/8 | 5/8 | 3/4 | 3/4 | 7/8 | 1 1/8 | 1 1/8 |
| | Piping length (ODU-IDU) | Max. (Equiv.) | m | 50 (65) | 50 (65) | 100 (130) | 100 (130) | 160 (185) | 160 (185) | 160 (185) |
| | Piping length (1st Branch - IDU) | Max. | m | 40 | 40 | 40 | 40 | 40 | 40 | 40 |
| | Total piping length (System) | Max. | m | 150 | 150 | 300 | 300 | 300 | 300 | 300 |
| | Level Difference (Outdoor in highest position) | Max. | m | 30 | 30 | 30 | 30 | 50 | 50 | 50 |
| | Level Difference (Indoor in highest position) | Max. | m | 25 | 25 | 30 | 30 | 40 | 40 | 40 |
| | Level Difference (IDU-IDU) | Max. | m | 15 | 15 | 30 | 30 | 50 | 50 | 50 |
| Wiring Connections | Communication | Minimum | mm² | 0.75 | 0.75 | 0.75 | 0.75 | 0.75 | 0.75 | 0.75 |
| | | Remark | - | F1, F2 | F1, F2 | F1, F2 | F1, F2 | F1, F2 | F1, F2 | F1, F2 |
| Refrigerant | Type | | | R410A | R410A | R410A | R410A | R410A | R410A | R410A |
| | Factory Charging | | kg / $tCO_2e$ | 2.00/4.18 | 2.50/5.22 | 3.70/7.73 | 3.70/7.73 | 3.70/7.73 | 4.30/8.98 | 4.80/10.02 |
| Sound [2] | Sound Pressure | Cooling | dB(A) | 52 | 55 | 59 | 56 | 58 | 59 | 62 |
| | | Heating | dB(A) | 54 | 57 | 59 | 58 | 60 | 61 | 64 |
| | Sound Power | | dB(A) | 73 | 75 | 77 | 74 | 74 | 76 | 79 |
| External Dimensions | Net Weight | | kg | 79.0 | 83.5 | 115.0 | 135.0 | 145.0 | 155.0 | 162.0 |
| | Net Dimensions (W x H x D) | | mm | 940 x 998 x 330 | 940 x 998 x 330 | 940 x 1,420 x 330 | 940 x 1,420 x 330 | 940 x 1,630 x 460 | 940 x 1,630 x 460 | 940 x 1,630 x 460 |
| Operating Temperature Range | Cooling | | ℃ | -5.0~48.0 | -5.0~48.0 | -5.0~48.0 | -5.0~48.0 | -5.0~52.0 | -5.0~52.0 | -5.0~52.0 |
| | Heating | | ℃ | -20.0~24.0 | -20.0~24.0 | -20.0~24.0 | -20.0~24.0 | -25.0~24.0 | -25.0~24.0 | -25.0~24.0 |

[1]Performances are based on the following test conditions:
- Cooling: Indoor temperature: 27 °C DB, 19 °C WB, Outdoor temperature: 35 °C DB, 24 °C WB
- Heating: Indoor temperature: 20 °C DB, 15 °C WB, Outdoor temperature: 7 °C DB, 6 °C WB
- Equivalent refrigerant piping: 7.5 m, Level differences: 0 m

[2]Sound pressure level is obtained in an anechoic room. Sound pressure level is a relative value, depending on the distance and acoustic environment. Sound pressure level may differ according to operating conditions. Sound power level is an absolute value that a sound source generates.

# Dimensional drawings

## DVM S Eco Heat Pump

### AM040KXMDEH/EU, AM050KXMDE

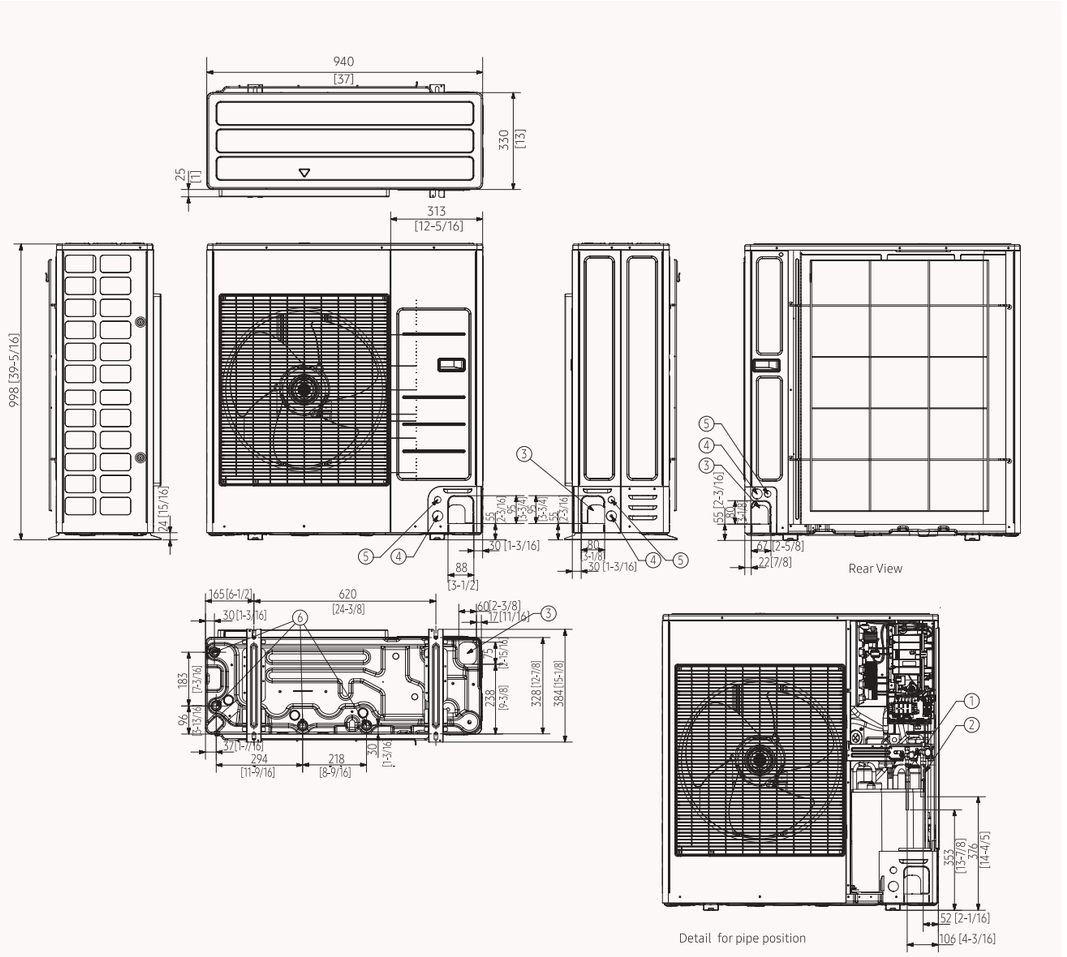


| NO | Name | Description |
|---|---|---|
| | | **4/5 hp** |
| 1 | Refrigerant liquid pipe | ø9.52 (ø3/8) |
| 2 | Refrigerant gas pipe | ø15.88 (ø5/8) |
| 3 | Knock-out hole for pipe intake | Front/Side/Rear/Bottom |
| 4 | Power wiring conduits | Front/Side/Rear, ø34.00 (ø1 3/8) |
| 5 | Communication wiring conduits | Front/Side/Rear, ø22.00 (ø7/8) |
| 6 | Drain holes | Connect with the provided drain plug. |

### AM080*XMDGH/EU

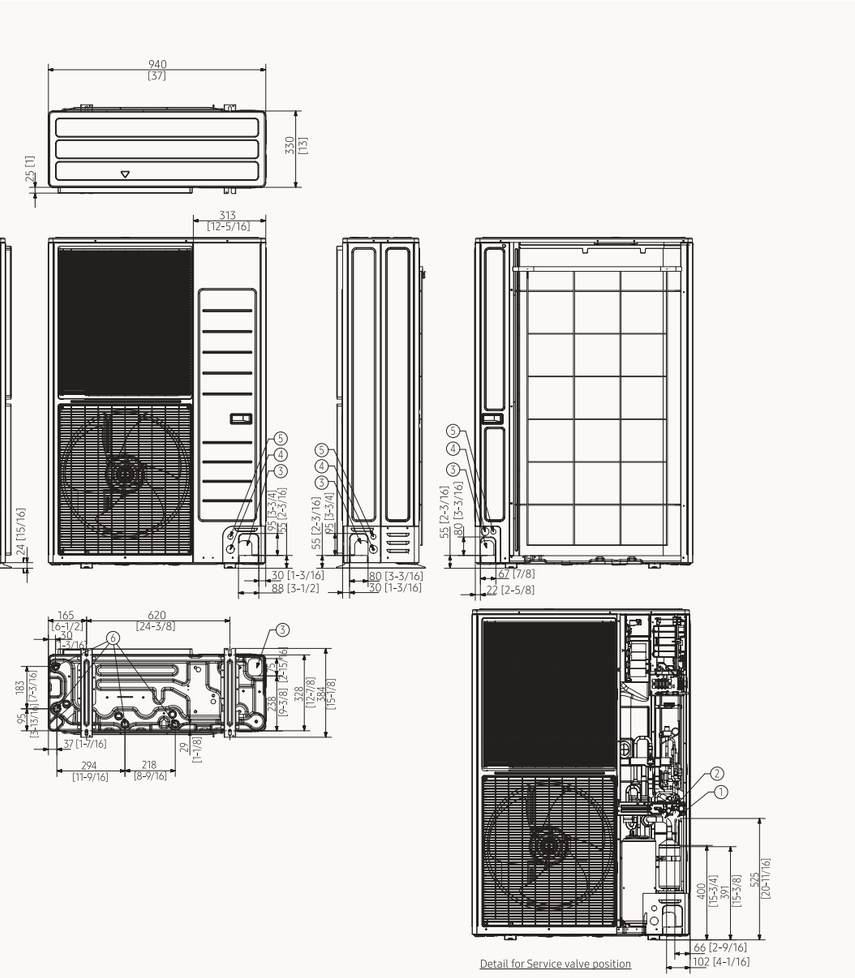


| NO | Name | Description |
|---|---|---|
| | | **8 hp** |
| 1 | Refrigerant gas pipe | ø19.05 (ø3/4) |
| 2 | Refrigerant liquid pipe | ø9.52 (ø3/8) |
| 3 | Knock-out hole for pipe intake | Front/Side/Rear/Bottom |
| 4 | Power wiring conduits | Front/Side/Rear, ø34.00 (ø1 3/8) |
| 5 | Communication wiring conduits | Front/Side/Rear, ø22.00 (ø7/8) |
| 6 | Drain holes | Connect with the provided drain plug. |

# Dimensional drawings

## DVM S Eco Heat Pump

**AM100KXMDGH/EU, AM120KXMDGH/EU, AM140KXMDGH/EU**

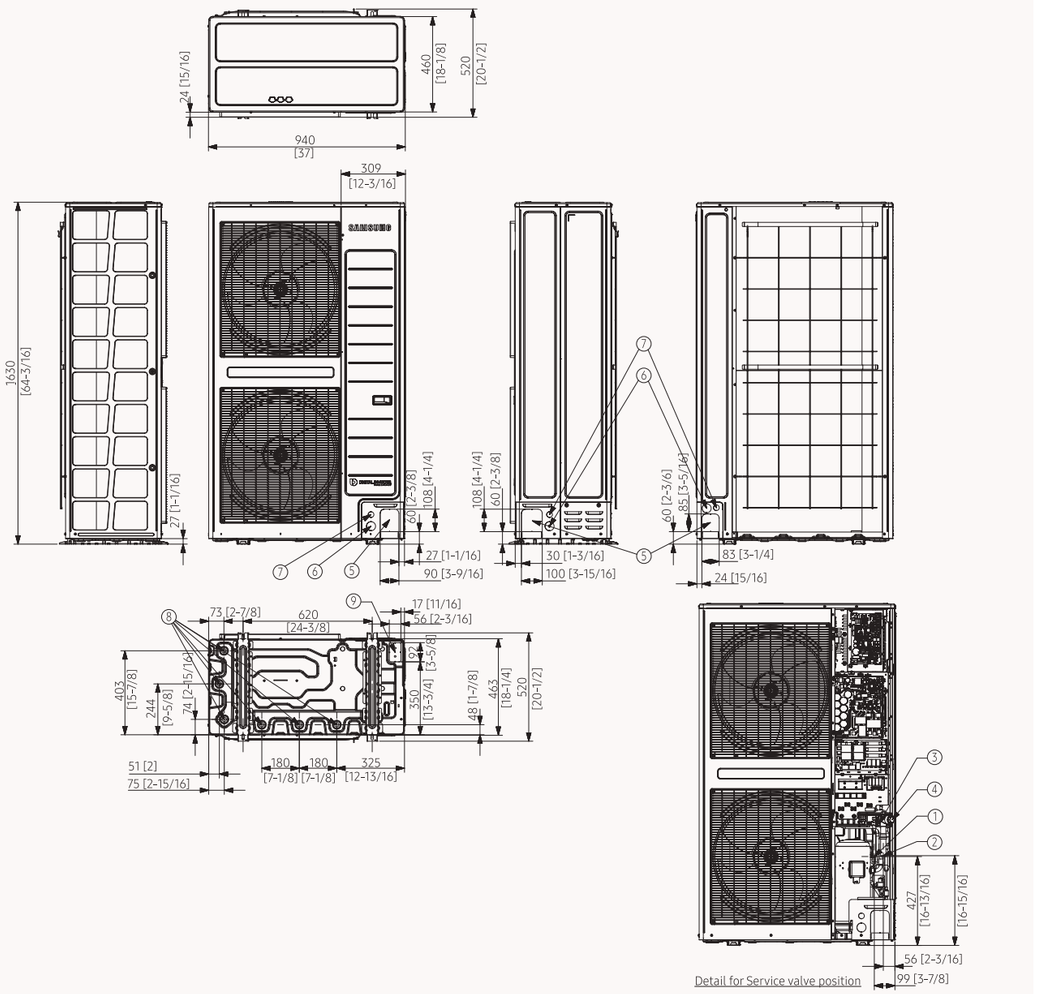


| NO | Name | Description | |
|---|---|---|---|
| | | 10 hp | 12/14 hp |
| 1 | Refrigerant liquid pipe | ø9.52 (ø3/8) | ø12.70 (ø1/2) |
| 2 | Refrigerant gas pipe | ø22.28 (ø5/8) | ø28.58 (ø3/4) |
| 3 | Service valve (gas) | | |
| 4 | Service valve (liquid) | | |
| 5 | Knock-out hole for pipe intake | Front/Side/Rear | |
| 6 | Power wiring conduits | Front/Side/Rear, ø44 (ø1 3/4) | |
| 7 | Communication wiring conduits | Front/Side/Rear, ø28 (ø1 1/8) | |
| 8 | Drain holes | Connect with the provided drain plug. | |
| 9 | Knock-out hole for pipe intake | Bottom | |

# Specifications

## DVM S Essential Heat Pump (2-Pipe)

- Horizontal discharge and rear suction by means of one (4~5 hp) or two (8~14 hp) propeller BLDC Inverter fan(s).
- Each module houses one Inverter Scroll compressor.
- Night Silent Mode available.
- Pump Down function (leak detection).
- "Intelligent defrost" (air resistant factor added) technology to minimise defrost operation.
- Eurovent certified and ErP (Ecodesign) compliant.
- Continuous operation in heating even during oil recovery cycle.







| Model Name | | | | AM100MXVDGH/ET | AM120MXVDGH/ET | AM140MXVDGH/ET | AM160MXVDGH/ET | AM180MXVDGH/ET |
|---|---|---|---|---|---|---|---|---|
| Power Supply | | | Φ, #, V, Hz | 3Φ, 4, 380~415 V, 50 Hz | 3Φ, 4, 380~415 V, 50 Hz | 3Φ, 4, 380~415 V, 50 Hz | 3Φ, 4, 380~415 V, 50 Hz | 3Φ, 4, 380~415 V, 50 Hz |
| Performance | hp | | hp | 10 | 12 | 14 | 16 | 18 |
| | Capacity | Cooling (Rated) | kW | 28.0 | 33.6 | 40.0 | 45.0 | 50.4 |
| | | Heating (Rated) | | 28.0 | 33.6 | 40.0 | 45.0 | 50.4 |
| | | Heating (Max) | | 31.5 | 37.8 | 45.0 | 50.4 | 56.7 |
| | Maximum number of connectable indoor units | | ea | 18 | 21 | 26 | 29 | 32 |
| | Total capacity of the connected indoor units | Min. | kW | 14.0 | 16.8 | 20.0 | 22.5 | 25.2 |
| | | Max. | | 36.4 | 43.7 | 52.0 | 58.5 | 65.5 |
| Power | Power Input | Cooling (Rated) | kW | 7.18 | 9.36 | 12.42 | 13.80 | 16.00 |
| | | Heating (Rated) | | 6.67 | 8.20 | 9.90 | 11.28 | 13.16 |
| | | Heating (Max) | | 7.99 | 9.82 | 11.86 | 13.51 | 15.77 |
| | Current Input | Cooling (Rated) | A | 11.50 | 15.00 | 19.90 | 22.10 | 25.70 |
| | | Heating (Rated) | | 10.70 | 13.20 | 15.90 | 18.10 | 21.10 |
| | | Heating (Max) | | 12.80 | 15.80 | 19.00 | 21.70 | 25.30 |
| | Current | Minimum SSC value | MVA | 4.5 | 5.3 | 5.4 | 7.2 | 8.8 |
| | | MCA | A | 21.1 | 25.0 | 25.0 | 32.0 | 39.2 |
| | | MFA | | 32 | 32 | 32 | 40 | 50 |
| Energy efficiency[1] | EER | Cooling (Rated) | W/W | 3.90 | 3.59 | 3.22 | 3.26 | 3.15 |
| | COP[1] | Heating (Rated) | W/W | 4.20 | 4.10 | 4.04 | 3.99 | 3.83 |
| | ESEER | | W/W | 7.08 | 6.58 | 6.60 | 6.39 | 5.91 |
| Compressor | Type | | - | Inverter Scroll x 1 | Inverter Scroll x 1 | Inverter Scroll x 1 | Inverter Scroll x 1 | Inverter Scroll x 1 |
| | Output | | kW x n | 6.39 x 1 | 6.39 x 1 | 6.39 x 1 | 7.81 x 1 | 7.81 x 1 |
| | Oil | Type | - | PVE | PVE | PVE | PVE | PVE |
| | | Initial Charge | cc x n | 1,100 x 1 | 1,100 x 1 | 1,100 x 1 | 1,400 x 1 | 1,400 x 1 |
| Fan | Type | | - | Propeller | Propeller | Propeller | Propeller | Propeller |
| | Discharge direction | | - | Vertical | Vertical | Vertical | Vertical | Vertical |
| | Number of Fans | | - | 1 | 1 | 2 | 2 | 2 |
| | Airflow Rate | | $m^3$/min | 170 | 220 | 255 | 255 | 290 |
| | | | l/s | 2.833 | 3.667 | 4.250 | 4.250 | 4.833 |
| | External Static Pressure | Max. | mmAq | 8.00 | 8.00 | 8.00 | 8.00 | 8.00 |
| | | | Pa | 78.45 | 78.45 | 78.45 | 78.45 | 78.45 |
| Fan Motor | Type | | - | BLDC Motor | BLDC Motor | BLDC Motor | BLDC Motor | BLDC Motor |
| | Output | | W x n | 830 x 1 | 830 x 1 | 620 x 2 | 620 x 2 | 620 x 2 |
| Piping Connections | Liquid Pipe | | ø, mm | 9.52 | 12.70 | 12.70 | 12.70 | 15.88 |
| | | | ø, inch | 3/8 | 1/2 | 1/2 | 1/2 | 5/8 |
| | Gas Pipe | | ø, mm | 22.22 | 28.58 | 28.58 | 28.58 | 28.58 |
| | | | ø, inch | 7/8 | 1 1/8 | 1 1/8 | 1 1/8 | 1 1/8 |
| | Piping length (ODU-IDU) | Max. (Equiv.) | m | 200 [220] | 200 [220] | 200 [220] | 200 [220] | 200 [220] |
| | Piping length (1st Branch - IDU) | Max. | | 90 | 90 | 90 | 90 | 90 |
| | Total piping length (System) | Max. | | 1,000 | 1,000 | 1,000 | 1,000 | 1,000 |
| | Level difference (ODU in highest position) | Max. | | 110 | 110 | 110 | 110 | 110 |
| | Level difference (IDU in highest position) | Max. | | 110 | 110 | 110 | 110 | 110 |
| | Level Difference (IDU-IDU) | Max. | | 50 | 50 | 50 | 50 | 50 |
| Wiring Connections | Transmission Cable | Min. | $mm^2$ | 0.75 | 0.75 | 0.75 | 0.75 | 0.75 |
| | | Remark | - | F1, F2 | F1, F2 | F1, F2 | F1, F2 | F1, F2 |
| Refrigerant | Type | | - | R410A | R410A | R410A | R410A | R410A |
| | Factory Charging | | kg | 5.5 | 6.5 | 7.7 | 8.4 | 8.4 |
| | | | $tCO_2e$ | 11.48 | 13.57 | 16.08 | 17.54 | 17.54 |
| Sound [2] | Sound Pressure | Cooling | dB(A) | 58 | 62 | 61 | 63 | 64 |
| | | Heating | | 60 | 64 | 63 | 67 | 67 |
| | Sound Power | | | 79 | 81 | 81 | 83 | 84 |
| External Dimensions | Net Weight | | kg | 197.0 | 210.0 | 226.0 | 253.0 | 255.0 |
| | Net Dimensions (W x H x D) | | mm | 880 x 1,695 x 765 | 880 x 1,695 x 765 | 1,295 x 1,695 x 765 | 1,295 x 1,695 x 765 | 1,295 x 1,695 x 765 |
| Operating Temperature Range | Cooling | | °C | -5~48 | -5~48 | -5~48 | -5~48 | -5~48 |
| | Heating | | | -25~24 | -25~24 | -25~24 | -25~24 | -25~24 |

[1] Performances are based on the following test conditions:
- Cooling: Indoor temperature: 27 °C DB, 19 °C WB, Outdoor temperature: 35 °C DB, 24 °C WB
- Heating: Indoor temperature: 20 °C DB, 15 °C WB, Outdoor temperature: 7 °C DB, 6 °C WB
- Equivalent refrigerant piping: 7.5 m, Level differences: 0 m

[2] Sound pressure level is obtained in an anechoic room. Sound pressure level is a relative value, depending on the distance and acoustic environment. Sound pressure level may differ according to operating conditions. Sound power level is an absolute value that a sound source generates.

# Dimensional drawings

## DVM S Essential Heat Pump (2-Pipe)

### AM100~120MXVDGH

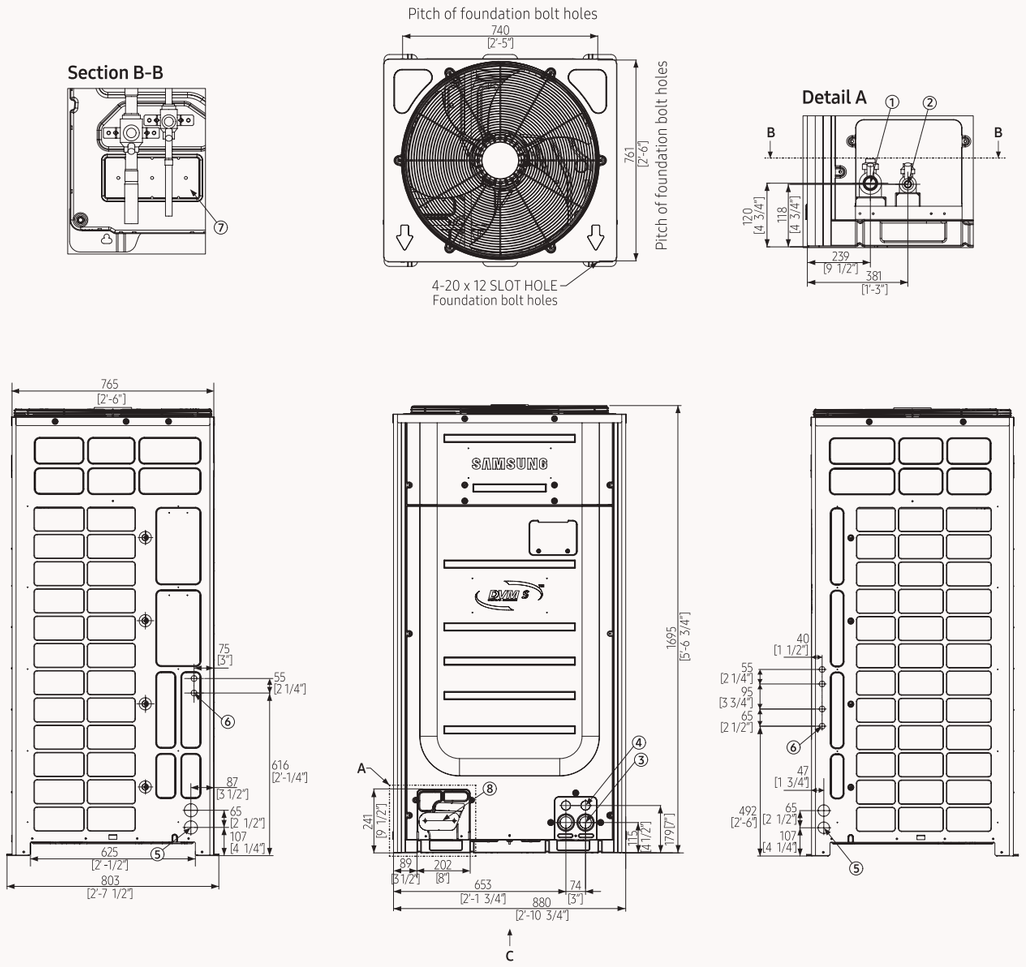


| NO | Name | Description |
|---|---|---|
| 1 | Gas Ref. pipe | See note 4 |
| 2 | Liquid Ref. pipe | See note 4 |
| 3 | Power wiring conduits | ø44 |
| 4 | Communication wiring conduits | ø34 |
| 5 | Power wiring conduits | ø44 |
| 6 | Communication wiring conduits | ø22 |
| 7 | Knock-out hole for Ref. piping (bottom) | |
| 8 | Knock-out hole for Ref. piping (front) | |

### AM140~180MXVDGH

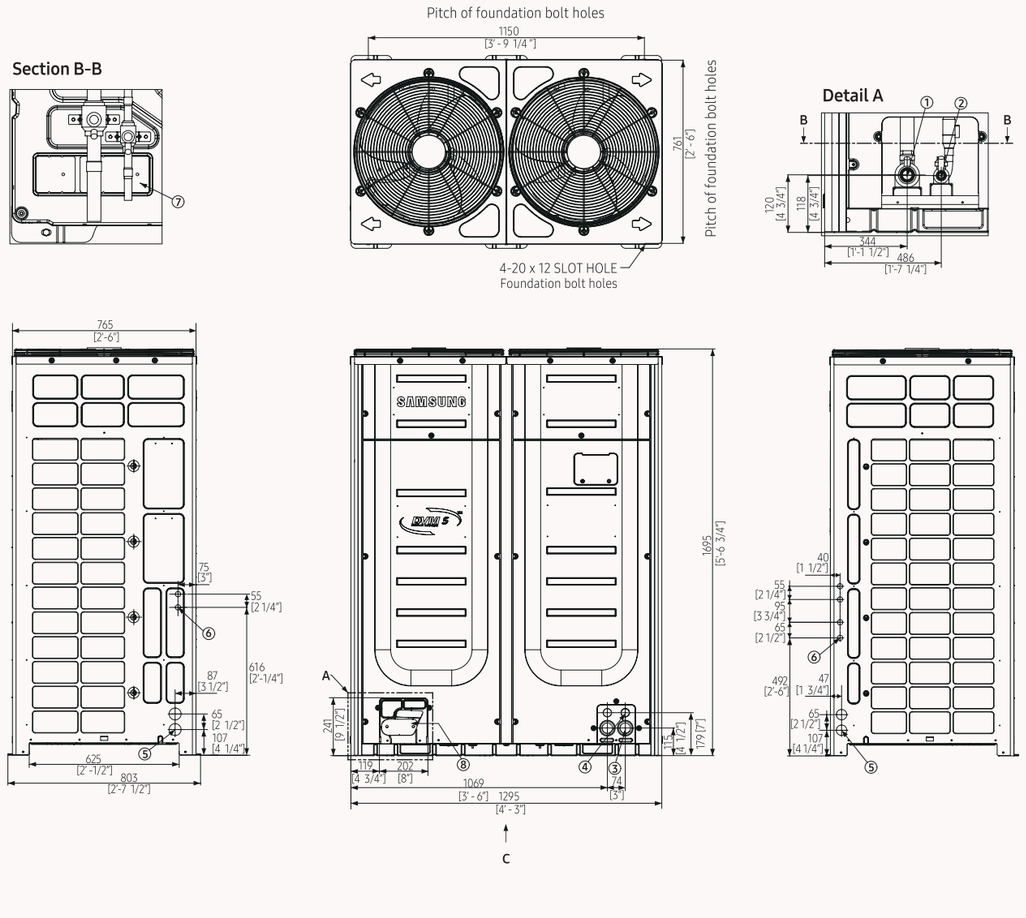


| NO | Name | Description |
|---|---|---|
| 1 | Gas Ref. pipe | See note 4 |
| 2 | Liquid Ref. pipe | See note 4 |
| 3 | Power wiring conduits | ø44 |
| 4 | Communication wiring conduits | ø34 |
| 5 | Power wiring conduits | ø44 |
| 6 | Communication wiring conduits | ø22 |
| 7 | Knock-out hole for Ref. piping (bottom) | |
| 8 | Knock-out hole for Ref. piping (front) | |

# Specifications

## DVM S Standard Heat Pump (2-Pipe)

- Vertical discharge and side-rear suction with by means of one (8~18 hp) or two (20~26 hp) propeller BLDC Inverter fan(s).
- Each module houses one (8~18 hp) or two (20~26 hp) Inverter Scroll compressors with Flash Injection technology.
- Night Silent Mode available.
- Pump Down function (leak detection).
- "Intelligent defrost" (air resistant factor added) technology to minimise defrost operation.
- Eurovent certified and ErP (Ecodesign) compliant.
- Continuous operation in heating even during oil recovery cycle.





| Model Name | | | | AM080JXVAGH/ET | AM100JXVAGH/ET | AM120JXVAGH/ET |
|---|---|---|---|---|---|---|
| Power Supply | | | Φ, #, V, Hz | 3Φ, 4, 380~415 V, 50 Hz | 3Φ, 4, 380~415 V, 50 Hz | 3Φ, 4, 380~415 V, 50 Hz |
| Performance | hp | | hp | 8 | 10 | 12 |
| | Capacity | Cooling | kW | 22.4 | 28.0 | 33.6 |
| | | Heating | kW | 22.4 | 28.0 | 33.6 |
| | Maximum number of connectable indoor units | | ea | 14 | 18 | 21 |
| | Total capacity of the connected indoor units | Min. | kW | 11.2 | 14.0 | 16.8 |
| | | Max. | kW | 29.1 | 36.4 | 43.7 |
| Power | Power Input | Cooling | kW | 5.0 | 6.9 | 8.2 |
| | | Heating | kW | 4.5 | 5.9 | 7.1 |
| | Current Input | Cooling | A | 8.00 | 11.00 | 13.10 |
| | | Heating | A | 7.30 | 9.50 | 11.40 |
| | Current | MCA | A | 18.0 | 21.1 | 25.0 |
| | | MFA | A | 25.0 | 32.0 | 32.0 |
| Energy Efficiency [1] | EER | Cooling | W/W | 4.48 | 4.09 | 4.12 |
| | COP[1] | Heating | W/W | 4.94 | 4.74 | 4.71 |
| Compressor | Output | | kW x n | 4.39 x 1 | 6.39 x 1 | 6.39 x 1 |
| | Oil | Type | - | PVE | PVE | PVE |
| | | Initial Charge | cc x n | 900 | 1,100 | 1,100 |
| Fan | Type | | - | Propeller | Propeller | Propeller |
| | Discharge direction | | - | Vertical | Vertical | Vertical |
| | Number of Fans | | - | 1 | 1 | 1 |
| | Airflow Rate | | $m^3$/min | 170 | 170 | 220 |
| | | | l/s | 2,833.3 | 2,833.3 | 3,666.7 |
| | External Static Pressure | Max. | mmAq | 8.00 | 8.00 | 8.00 |
| | | | Pa | 78.50 | 78.50 | 78.50 |
| Fan Motor | Type | | - | BLDC Motor | BLDC Motor | BLDC Motor |
| | Output | | W x n | 830 x 1 | 830 x 1 | 830 x 1 |
| Piping Connections | Liquid Pipe | | ø, mm | 9.52 | 9.52 | 12.70 |
| | | | ø, inch | 3/8 | 3/8 | 1/2 |
| | Gas Pipe | | ø, mm | 19.05 | 22.22 | 28.58 |
| | | | ø, inch | 3/4 | 7/8 | 1 1/8 |
| | Piping length (ODU-IDU) | Max. (Equiv.) | m | 200 [220] | 200 [220] | 200 [220] |
| | Piping length (1st Branch - IDU) | Max. | m | 90 | 90 | 90 |
| | Total piping length (System) | Max. | m | 1,000 | 1,000 | 1,000 |
| | Level difference (ODU in highest position) | Max. | m | 110 | 110 | 110 |
| | Level difference (IDU in highest position) | Max. | m | 110 | 110 | 110 |
| | Level Difference (IDU-IDU) | Max. | m | 50 | 50 | 50 |
| Wiring Connections | Transmission Cable | | $mm^2$ | 0.75 | 0.75 | 0.75 |
| | Remark | | - | F1, F2 | F1, F2 | F1, F2 |
| Refrigerant | Type | | - | R410A | R410A | R410A |
| | Factory Charging | | kg | 5.5 | 5.5 | 6.5 |
| | | | $tCO_2e$ | 11.5 | 11.5 | 13.6 |
| Sound [2] | Sound Pressure | Cooling | dB(A) | 57 | 58 | 62 |
| | | Heating | dB(A) | 59 | 60 | 64 |
| | Sound Power | | dB(A) | 77 | 79 | 81 |
| External Dimensions | Net Weight | | kg | 186.0 | 197.0 | 210.0 |
| | Net Dimensions (W x H x D) | | mm | 878 x 1,695 x 765 | 878 x 1,695 x 765 | 878 x 1,695 x 765 |
| Operating Temperature Range | Cooling | | ℃ | -5~48 | -5~48 | -5~48 |
| | Heating | | ℃ | -25~24 | -25~24 | -25~24 |

[1] Performances are based on the following test conditions:
- Cooling: Indoor temperature: 27 °C DB, 19 °C WB, Outdoor temperature: 35 °C DB, 24 °C WB
- Heating: Indoor temperature: 20 °C DB, 15 °C WB, Outdoor temperature: 7 °C DB, 6 °C WB
-Equivalent refrigerant piping: 7.5 m, Level differences: 0 m

2 Sound pressure level is obtained in an anechoic room. Sound pressure level is a relative value, depending on the distance and acoustic environment. Sound pressure level may differ according to operating conditions. Sound power level is an absolute value that a sound source generates.









| AM140KXVAGH/ET | AM160KXVAGH/ET | AM180KXVAGH/ET | AM200KXVAGH/ET | AM220KXVAGH/ET | AM240KXVAGH/ET | AM260KXVAGH/ET |
|---|---|---|---|---|---|---|
| 3Φ, 4, 380~415 V, 50 Hz | 3Φ, 4, 380~415 V, 50 Hz | 3Φ, 4, 380~415 V, 50 Hz | 3Φ, 4, 380~415 V, 50 Hz | 3Φ, 4, 380~415 V, 50 Hz | 3Φ, 4, 380~415 V, 50 Hz | 3Φ, 4, 380~415 V, 50 Hz |
| 14 | 16 | 18 | 20 | 22 | 24 | 26 |
| 40.0 | 45.0 | 50.4 | 56.0 | 61.6 | 67.2 | 72.8 |
| 40.0 | 45.0 | 50.4 | 56.0 | 58.0 | 67.2 | 72.8 |
| 26 | 29 | 32 | 36 | 40 | 43 | 47 |
| 20.0 | 22.5 | 25.2 | 28.0 | 30.8 | 33.6 | 36.4 |
| 52.0 | 58.5 | 65.5 | 72.8 | 80.1 | 87.4 | 94.6 |
| 10.9 | 11.6 | 13.6 | 16.2 | 18.5 | 21.0 | 22.5 |
| 9.0 | 10.1 | 10.8 | 12.2 | 12.9 | 14.9 | 16.5 |
| 17.50 | 18.70 | 21.90 | 26.00 | 29.70 | 33.70 | 36.00 |
| 14.50 | 16.20 | 17.30 | 19.50 | 20.70 | 23.90 | 26.50 |
| 25.0 | 32.0 | 39.2 | 42.0 | 44.6 | 55.0 | 60.0 |
| 32.0 | 40.0 | 50.0 | 63.0 | 63.0 | 63.0 | 75.0 |
| 3.66 | 3.87 | 3.70 | 3.45 | 3.32 | 3.20 | 3.20 |
| 4.43 | 4.46 | 4.68 | 4.60 | 4.50 | 4.50 | 4.40 |
| 6.39 x 1 | 7.81 x 1 | 7.81 x 1 | 5.18 x 2 | 6.39 x 2 | 6.39 x 2 | 6.39 x 2 |
| PVE | PVE | PVE | PVE | PVE | PVE | PVE |
| 1,100 | 1,400 | 1,400 | 1,100 x 2 | 1,100 x 2 | 1,100 x 2 | 1,100 x 2 |
| Propeller | Propeller | Propeller | Propeller | Propeller | Propeller | Propeller |
| Vertical | Vertical | Vertical | Vertical | Vertical | Vertical | Vertical |
| 2 | 2 | 2 | 2 | 2 | 2 | 2 |
| 255 | 255 | 290 | 290 | 290 | 340 | 340 |
| 4,250.0 | 4,250.0 | 4,833.3 | 4,833.3 | 4,833.3 | 5,666.7 | 5,666.7 |
| 8.00 | 8.00 | 8.00 | 8.00 | 8.00 | 8.00 | 8.00 |
| 78.50 | 78.50 | 78.50 | 78.50 | 78.50 | 78.50 | 78.50 |
| BLDC Motor | BLDC Motor | BLDC Motor | BLDC Motor | BLDC Motor | BLDC Motor | BLDC Motor |
| 620 x 2 | 620 x 2 | 620 x 2 | 620 x 2 | 620 x 2 | 620 x 2 | 620 x 2 |
| 12.70 | 12.70 | 15.88 | 15.88 | 15.88 | 15.88 | 19.05 |
| 1/2 | 1/2 | 5/8 | 5/8 | 5/8 | 5/8 | 3/4 |
| 28.58 | 28.58 | 28.58 | 28.58 | 28.58 | 34.92 | 34.92 |
| 1 1/8 | 1 1/8 | 1 1/8 | 1 1/8 | 1 1/8 | 1 3/8 | 1 3/8 |
| 200 [220] | 200 [220] | 200 [220] | 200 [220] | 200 [220] | 200 [220] | 200 [220] |
| 90 | 90 | 90 | 90 | 90 | 90 | 90 |
| 1,000 | 1,000 | 1,000 | 1,000 | 1,000 | 1,000 | 1,000 |
| 110 | 110 | 110 | 110 | 110 | 110 | 110 |
| 110 | 110 | 110 | 110 | 110 | 110 | 110 |
| 50 | 50 | 50 | 50 | 50 | 50 | 50 |
| 0.75 | 0.75 | 0.75 | 0.75 | 0.75 | 0.75 | 0.75 |
| F1, F2 | F1, F2 | F1, F2 | F1, F2 | F1, F2 | F1, F2 | F1, F2 |
| R410A | R410A | R410A | R410A | R410A | R410A | R410A |
| 7.7 | 8.4 | 8.4 | 8.4 | 8.4 | 14.0 | 14.0 |
| 16.1 | 17.5 | 17.5 | 17.5 | 17.5 | 29.2 | 29.2 |
| 61 | 63 | 64 | 65 | 65 | 66 | 66 |
| 63 | 67 | 67 | 67 | 67 | 69 | 69 |
| 81 | 83 | 84 | 87 | 89 | 89 | 89 |
| 226.0 | 253.0 | 255.0 | 282.0 | 290.0 | 342.0 | 350.0 |
| 1,291 x 1,695 x 765 | 1,291 x 1,695 x 765 | 1,291 x 1,695 x 765 | 1,291 x 1,695 x 765 | 1,291 x 1,695 x 765 | 1,291 x 1,795 x 765 | 1,291 x 1,795 x 765 |
| -5~48 | -5~48 | -5~48 | -5~48 | -5~48 | -5~48 | -5~48 |
| -25~24 | -25~24 | -25~24 | -25~24 | -25~24 | -25~24 | -25~24 |

# Dimensional drawings

## DVM S Standard Heat Pump (2-Pipe)

### AM080/100/120JXVAGH

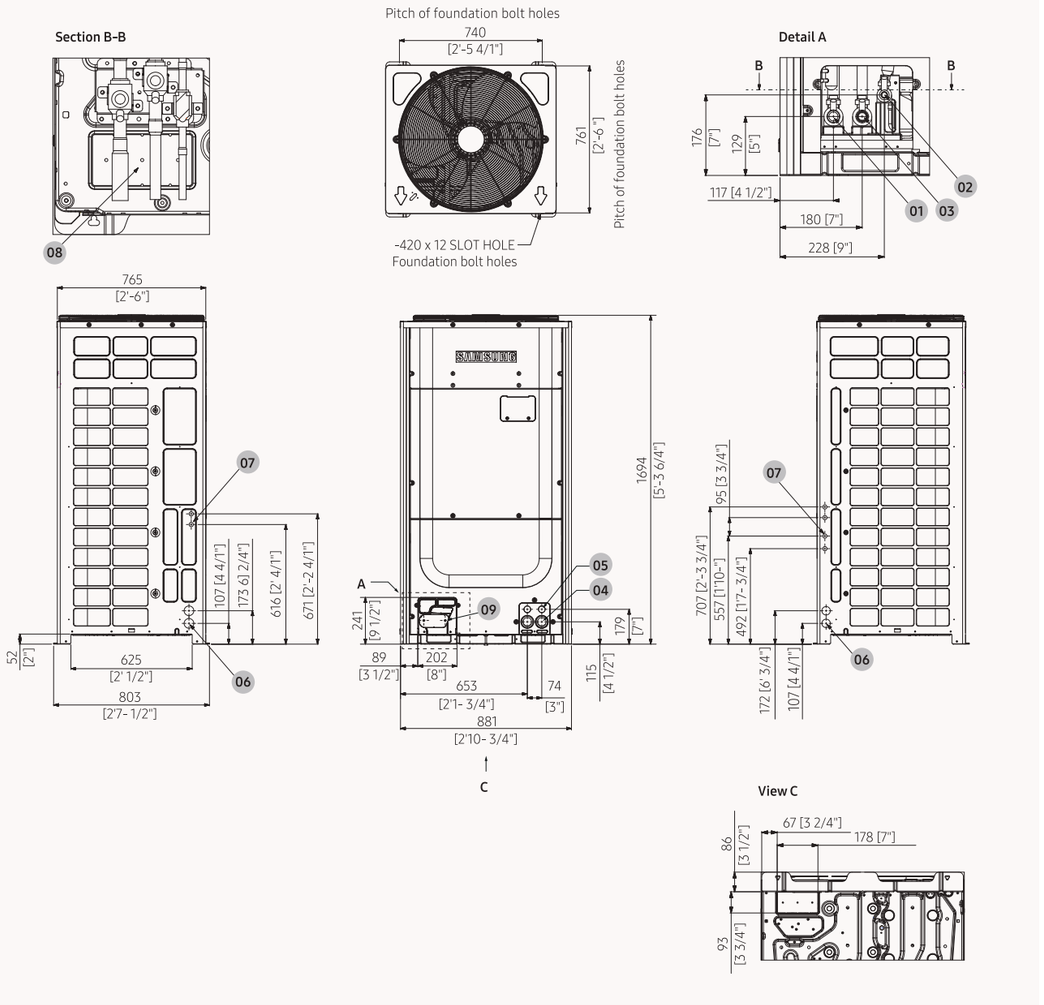


| NO | Name | Description |
|---|---|---|
| 1 | Low Pressure Gas Ref. pipe | See note 4 |
| 2 | High Pressure Gas Ref. pipe | See note 4 |
| 3 | Liquid Ref. pipe | ø44 |
| 4 | Power wiring conduits | ø34 |
| 5 | Communication wiring conduits | ø44 |
| 6 | Power wiring conduits | ø22 |
| 7 | Communication wiring conduits | |
| 8 | Knock-out hole for Ref. piping (bottom) | |
| 9 | Knock-out hole for Ref. piping (front) | |

1. Detail A and SECTION B-B indicate the dimensions after fixing the attached piping.
2. Item 4-9: Knock-out hole.
3. View C indicates the dimensions of the knock-out hole (bottom).
4. Pipe [ø, mm (inch)]: Brazing connection.

### AM140/160/180/200/220KXVAGH

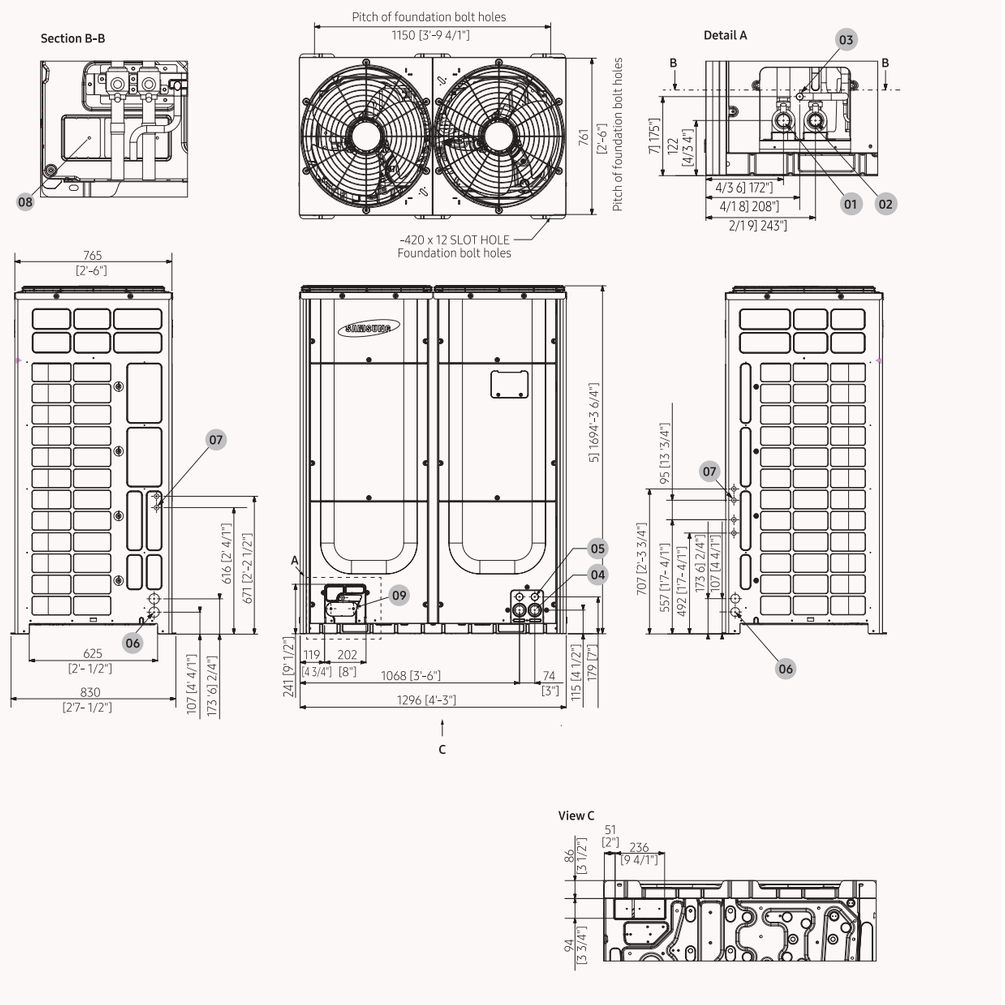


| NO | Name | Description |
|---|---|---|
| 1 | Low Pressure Gas Ref. pipe | See note 4 |
| 2 | High Pressure Gas Ref. pipe | See note 4 |
| 3 | Liquid Ref. pipe | ø44 |
| 4 | Power wiring conduits | ø34 |
| 5 | Communication wiring conduits | ø44 |
| 6 | Power wiring conduits | ø22 |
| 7 | Communication wiring conduits | |
| 8 | Knock-out hole for Ref. piping (bottom) | |
| 9 | Knock-out hole for Ref. piping (front) | |

1. Detail A and SECTION B-B indicate the dimensions after fixing the attached piping.
2. Item 4-9: Knock-out hole.
3. View C indicates the dimensions of the knock-out hole (bottom).
4. Pipe [ø, mm (inch)]: Brazing connection.

# Dimensional drawings

## DVM S Standard Heat Pump (2-Pipe)

**AM240/260KXVAGH**

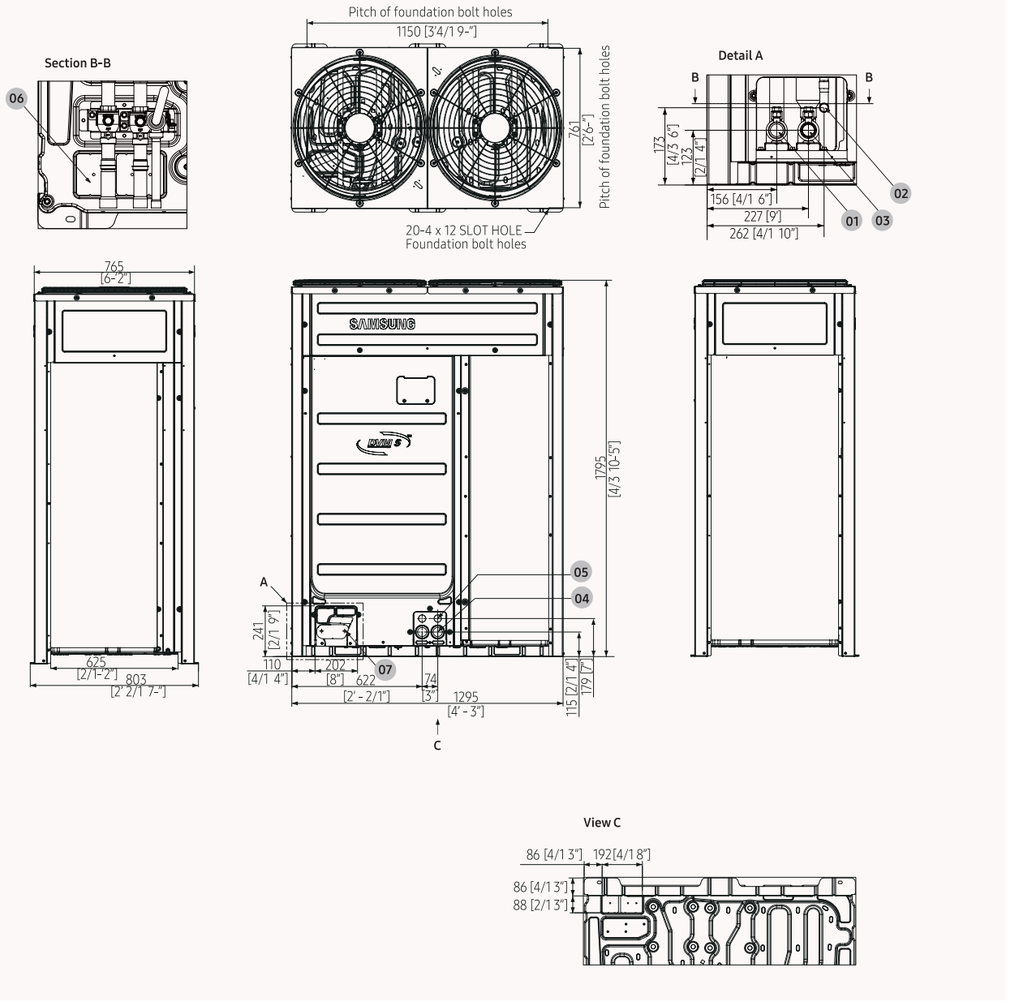


| NO | Name | Description |
|---|---|---|
| 1 | Low Pressure Gas Ref. pipe | See note 4 |
| 2 | High Pressure Gas Ref. pipe | See note 4 |
| 3 | Liquid Ref. pipe | ø44 |
| 4 | Power wiring conduits | ø34 |
| 5 | Communication wiring conduits | ø44 |
| 6 | Power wiring conduits | ø22 |
| 7 | Communication wiring conduits | |
| 8 | Knock-out hole for Ref. piping (bottom) | |
| 9 | Knock-out hole for Ref. piping (front) | |

1. Detail A and SECTION B-B indicate the dimensions after fixing the attached piping.
2. Item 4-9: Knock-out hole.
3. View C indicates the dimensions of the knock-out hole (bottom).
4. Pipe [ø, mm (inch)]: Brazing connection.

# Specifications

## DVM S High EER Heat Pump (2-Pipe)

- Vertical discharge and side-rear suction with by means of one (8~18 hp) or two (20~26 hp) propeller BLDC Inverter fan(s).
- Each module houses one (8~18 hp) or two (20~26 hp) Inverter Scroll compressors with Flash Injection technology.
- Night Silent Mode available.
- Pump Down function (leak detection).
- "Intelligent defrost" (air resistant factor added) technology to minimise defrost operation.
- Eurovent certified and ErP (Ecodesign) compliant.
- Continuous operation in heating even during oil recovery cycle.

[1]Performances are based on the following test conditions:
- Cooling: Indoor temperature: 27 °C DB, 19 °C WB, Outdoor temperature: 35 °C DB, 24 °C WB
- Heating: Indoor temperature: 20 °C DB, 15 °C WB, Outdoor temperature: 7 °C DB, 6 °C WB
- Equivalent refrigerant piping: 7.5 m, Level differences: 0 m

2Sound pressure level is obtained in an anechoic room. Sound pressure level is a relative value, depending on the distance and acoustic environment. Sound pressure level may differ according to operating conditions. Sound power level is an absolute value that a sound source generates.



| Model Name | | | | AM080JXVHGH/ET | AM100JXVHGH/ET | AM120JXVHGH/ET |
|---|---|---|---|---|---|---|
| Power Supply | | | Φ, #, V, Hz | 3Φ, 4, 380~415 V, 50 Hz | 3Φ, 4, 380~415 V, 50 Hz | 3Φ, 4, 380~415 V, 50 Hz |
| Performance | hp | | hp | 8 | 10 | 12 |
| | Capacity | Cooling | kW | 22.4 | 28.0 | 33.6 |
| | | Heating | | 22.4 | 28.0 | 33.6 |
| | Maximum number of connectable indoor units | | ea | 14 | 18 | 21 |
| | Total capacity of the connected indoor units | Min. | kW | 11.2 | 14.0 | 16.8 |
| | | Max. | | 29.1 | 36.4 | 43.7 |
| Power | Power Input | Cooling | kW | 4.59 | 6.22 | 7.57 |
| | | Heating | | 4.08 | 5.23 | 6.72 |
| | Current Input | Cooling | A | 7.40 | 10.00 | 12.10 |
| | | Heating | | 6.50 | 8.40 | 10.80 |
| | Current | Minimum SSC value | MVA | 3.1 | 4.5 | 5.3 |
| | | MCA | A | 18.0 | 21.1 | 25.0 |
| | | MFA | | 25 | 32 | 32 |
| Energy Efficiency[1] | EER | Cooling | W/W | 4.88 | 4.50 | 4.44 |
| | COP[1] | Heating | W/W | 5.49 | 5.35 | 5.00 |
| Compressor | Output | | kW x n | 5.18 x 1 | 6.39 x 1 | 6.39 x 1 |
| | Oil | Type | - | PVE | PVE | PVE |
| | | Initial Charge | cc x n | 1,100 x 1 | 1,100 x 1 | 1,100 x 1 |
| Fan | Type | | - | Propeller | Propeller | Propeller |
| | Discharge direction | | - | Top | Top | Top |
| | Number of Fans | | - | 1 | 1 | 1 |
| | Airflow Rate | | m³/min | 170 | 170 | 220 |
| | | | L/s | 2,833 | 2,833 | 3,667 |
| | External Static Pressure | Max. | mmAq | 8.00 | 8.00 | 8.00 |
| | | | Pa | 78.45 | 78.45 | 78.45 |
| Fan Motor | Type | | - | BLDC Motor | BLDC Motor | BLDC Motor |
| | Output | | W x n | 830 x 1 | 830 x 1 | 830 x 1 |
| Piping Connections | Liquid Pipe | | ø, mm | 9.52 | 9.52 | 12.70 |
| | | | ø, inch | 3/8 | 3/8 | 1/2 |
| | Gas Pipe | | ø, mm | 19.05 | 22.22 | 28.58 |
| | | | ø, inch | 3/4 | 7/8 | 1 1/8 |
| | Piping length (ODU-IDU) | Max. (Equiv.) | m | 200 [220] | 200 [220] | 200 [220] |
| | Piping length (1st Branch - IDU) | Max. | | 90 | 90 | 90 |
| | Total piping length (System) | Max. | | 1,000 | 1,000 | 1,000 |
| | Level difference (ODU in highest position) | Max. | | 110 | 110 | 110 |
| | Level difference (IDU in highest position) | Max. | | 110 | 110 | 110 |
| | Level Difference (IDU-IDU) | Max. | | 50 | 50 | 50 |
| Wiring Connections | Transmission Cable | | mm² | 0.75 | 0.75 | 0.75 |
| | Remark | | - | F1, F2 | F1, F2 | F1, F2 |
| Refrigerant | Type | | - | R410A | R410A | R410A |
| | Factory Charging | | kg | 6.5 | 6.5 | 6.5 |
| | | | $tCO_2e$ | 13.57 | 13.57 | 13.57 |
| Sound [2] | Sound Pressure | Cooling | dB(A) | 57 | 58 | 62 |
| | | Heating | dB(A) | 59 | 60 | 64 |
| | Sound Power | | dB(A) | 77 | 79 | 81 |
| External Dimensions | Net Weight | | kg | 195.5 | 195.5 | 195.5 |
| | Net Dimensions (W x H x D) | | mm | 880 x 1,695 x 765 | 880 x 1,695 x 765 | 880 x 1,695 x 765 |
| Operating Temperature Range | Cooling | | °C | -5~48 | -5~48 | -5~48 |
| | Heating | | | -25~24 | -25~24 | -25~24 |



| AM140JXVHGH/ET | AM160JXVHGH/ET | AM180JXVHGH/ET | AM200JXVHGH/ET | AM220JXVHGH/ET | AM240KXVGGH/ET | AM260KXVGGH/ET |
|---|---|---|---|---|---|---|
| 3Φ, 4, 380~415 V, 50 Hz | 3Φ, 4, 380~415 V, 50 Hz | 3Φ, 4, 380~415 V, 50 Hz | 3Φ, 4, 380~415 V, 50 Hz | 3Φ, 4, 380~415 V, 50 Hz | 3Φ, 4, 380~415 V, 50 Hz | 3Φ, 4, 380~415 V, 50 Hz |
| 14 | 16 | 18 | 20 | 22 | 24 | 26 |
| 40.0 | 45.0 | 50.4 | 56.0 | 61.6 | 67.2 | 72.8 |
| 40.0 | 45.0 | 50.4 | 56.0 | 61.6 | 67.2 | 72.8 |
| 26 | 29 | 32 | 36 | 40 | 43 | 47 |
| 20.0 | 22.5 | 25.2 | 28.0 | 30.8 | 33.6 | 36.4 |
| 52.0 | 58.5 | 65.5 | 72.8 | 80.1 | 87.4 | 94.6 |
| 8.89 | 10.92 | 12.32 | 13.83 | 15.88 | 18.61 | 20.92 |
| 8.55 | 8.95 | 10.02 | 11.22 | 12.91 | 13.20 | 15.17 |
| 14.30 | 17.50 | 19.80 | 22.20 | 25.50 | 29.80 | 33.60 |
| 13.70 | 14.40 | 16.10 | 18.00 | 20.70 | 21.20 | 24.30 |
| 5.3 | 6.6 | 7.6 | 8.0 | 8.6 | 12.5 | 12.2 |
| 25.0 | 32.0 | 39.2 | 42.0 | 44.6 | 55.0 | 60 |
| 32 | 40 | 50 | 63 | 63 | 63 | 75 |
| 4.50 | 4.12 | 4.09 | 4.05 | 3.88 | 3.61 | 3.48 |
| 4.68 | 5.03 | 5.03 | 4.99 | 4.77 | 5.09 | 4.80 |
| 6.39 x 1 | 4.39 x 2 | 6.39 x 2 | 6.39 x 2 | 6.39 x 2 | 6.76 x 2 | 7.81 x 2 |
| PVE | PVE | PVE | PVE | PVE | PVE | PVE |
| 1,100 x 1 | 900 x 2 | 1,100 x 2 | 1,100 x 2 | 1,100 x 2 | 1,100 x 2 | 1,400 x 2 |
| Propeller | Propeller | Propeller | Propeller | Propeller | Propeller | Propeller |
| Top | Top | Top | Top | Top | Top | Top |
| 2 | 2 | 2 | 2 | 2 | 2 | 2 |
| 255 | 255 | 290 | 290 | 290 | 340 | 340 |
| 4,250 | 4,250 | 4,833 | 4,833 | 4,833 | 5,667 | 5,667 |
| 8.00 | 8.00 | 8.00 | 8.00 | 8.00 | 8.00 | 8.00 |
| 78.45 | 78.45 | 78.45 | 78.45 | 78.45 | 78.45 | 78.45 |
| BLDC Motor | BLDC Motor | BLDC Motor | BLDC Motor | BLDC Motor | BLDC Motor | BLDC Motor |
| 620 x 2 | 620 x 2 | 620 x 2 | 620 x 2 | 620 x 2 | 620 x 2 | 620 x 2 |
| 12.70 | 12.70 | 15.88 | 15.88 | 15.88 | 15.88 | 19.05 |
| 1/2 | 1/2 | 5/8 | 5/8 | 5/8 | 5/8 | 3/4 |
| 28.58 | 28.58 | 28.58 | 28.58 | 28.58 | 34.92 | 34.92 |
| 1 1/8 | 1 1/8 | 1 1/8 | 1 1/8 | 1 1/8 | 1 3/8 | 1 3/8 |
| 200 [220] | 200 [220] | 200 [220] | 200 [220] | 200 [220] | 200 [220] | 200 [220] |
| 90 | 90 | 90 | 90 | 90 | 90 | 90 |
| 1,000 | 1,000 | 1,000 | 1,000 | 1,000 | 1,000 | 1,000 |
| 110 | 110 | 110 | 110 | 110 | 110 | 110 |
| 110 | 110 | 110 | 110 | 110 | 110 | 110 |
| 50 | 50 | 50 | 50 | 50 | 50 | 50 |
| 0.75 | 0.75 | 0.75 | 0.75 | 0.75 | 0.75 | 0.75 |
| F1, F2 | F1, F2 | F1, F2 | F1, F2 | F1, F2 | F1, F2 | F1, F2 |
| R410A | R410A | R410A | R410A | R410A | R410A | R410A |
| 9.4 | 9.4 | 8.4 | 11.0 | 11.0 | 14.0 | 14.0 |
| 19.63 | 19.63 | 17.54 | 22.97 | 22.97 | 29.23 | 29.23 |
| 61 | 62 | 63 | 64 | 65 | 69 | 69 |
| 63 | 66 | 67 | 67 | 67 | 71 | 71 |
| 81 | 82 | 85 | 86 | 88 | 90 | 90 |
| 253.0 | 284.0 | 293.0 | 308.0 | 308.0 | 342.0 | 350.0 |
| 1,295 x 1,695 x 765 | 1,295 x 1,695 x 765 | 1,295 x 1,695 x 765 | 1,295 x 1,695 x 765 | 1,295 x 1,695 x 765 | 1,295 x 1,795 x 765 | 1,295 x 1,795 x 765 |
| -5~48 | -5~48 | -5~48 | -5~48 | -5~48 | -5~48 | -5~48 |
| -25~24 | -25~24 | -25~24 | -25~24 | -25~24 | -25~24 | -25~24 |

# Dimensional drawings

## DVM S High EER Heat Pump (2-Pipe)

### AM080/100/120JXVHGH

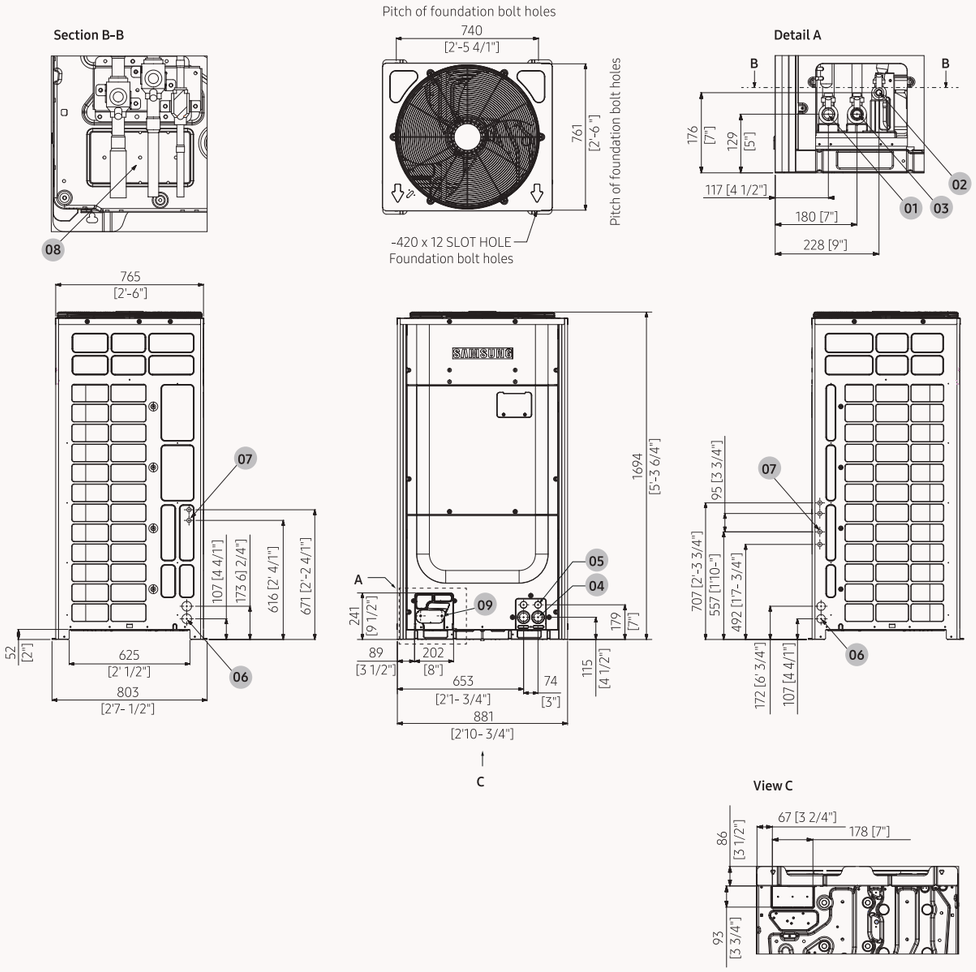


| NO | Name | Description |
|---|---|---|
| 1 | Refrigerant gas pipe | See note 4 |
| 2 | Refrigerant liquid pipe | See note 4 |
| 3 | Power wiring conduits | ø44 |
| 4 | Communication wiring conduits | ø34 |
| 5 | Power wiring conduits | ø44 |
| 6 | Communication wiring conduits | ø22 |
| 7 | Knock-out hole for Ref. piping (bottom) | |
| 8 | Knock-out hole for Ref. piping (front) | |

### AM140/160/180/200/220JXVHGH

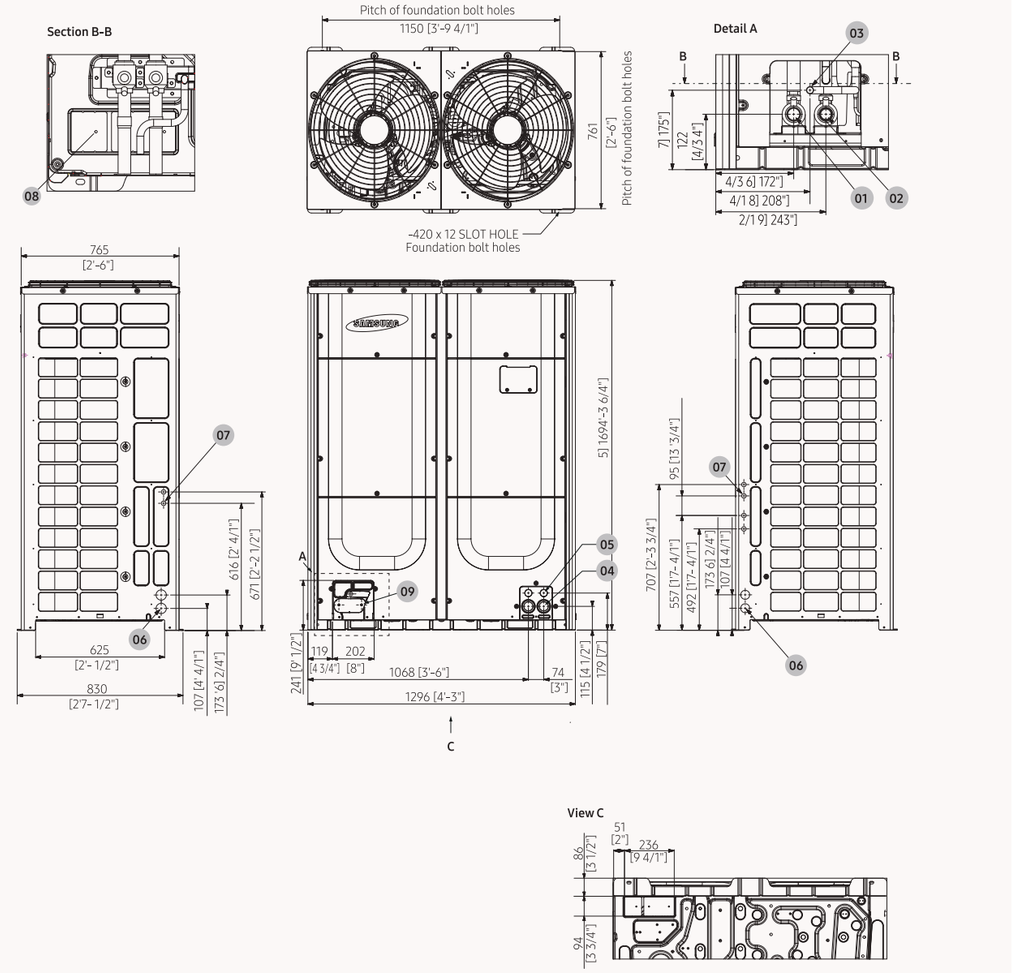


| NO | Name | Description |
|---|---|---|
| 1 | Refrigerant gas pipe | See note 4 |
| 2 | Refrigerant liquid pipe | See note 4 |
| 3 | Power wiring conduits | ø44 |
| 4 | Communication wiring conduits | ø34 |
| 5 | Power wiring conduits | ø44 |
| 6 | Communication wiring conduits | ø22 |
| 7 | Knock-out hole for Ref. piping (bottom) | |
| 8 | Knock-out hole for Ref. piping (front) | |

# Dimensional drawings

## DVM S High EER Heat Pump (2-Pipe)

**AM240/260JXVGGH**

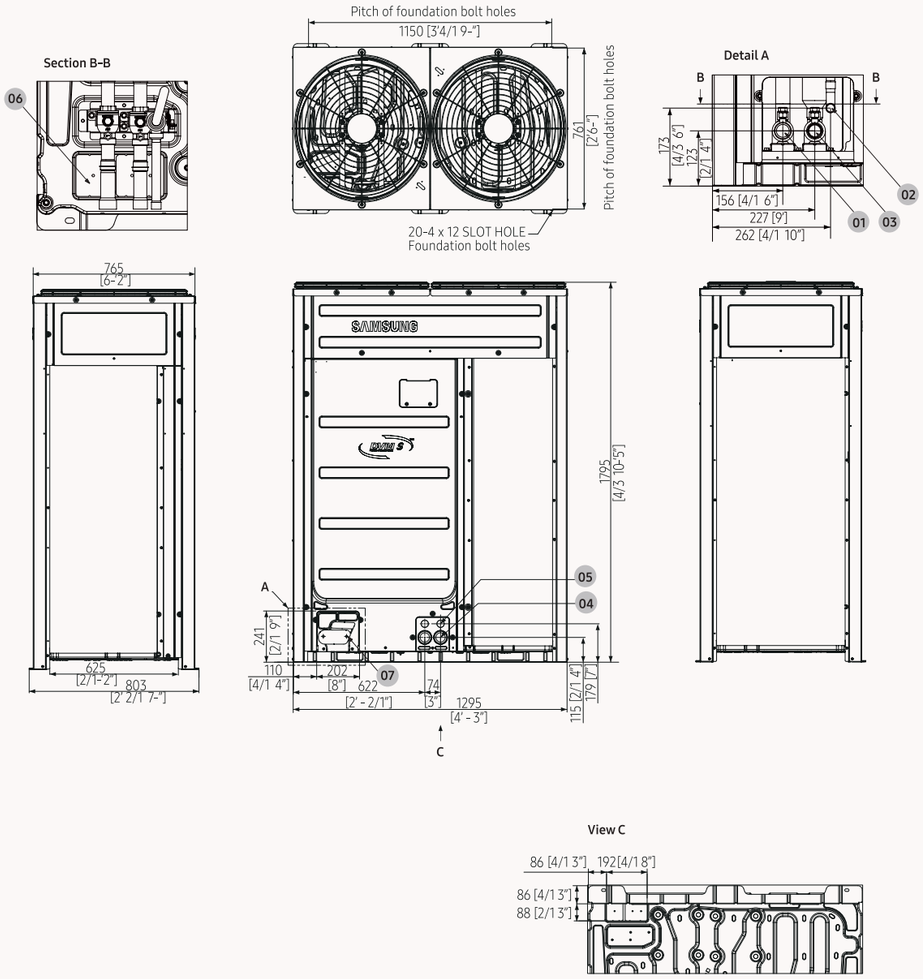


| NO | Name | Description |
|---|---|---|
| 1 | Refrigerant gas pipe | See note 4 |
| 2 | Refrigerant liquid pipe | See note 4 |
| 3 | Power wiring conduits | ø44 |
| 4 | Communication wiring conduits | ø34 |
| 5 | Knock-out hole for Ref. piping (bottom) | |
| 6 | Knock-out hole for Ref. piping (front) | |

# Specifications

## DVM S Eco Heat Recovery (With Heat Recovery Changer Kit)

- Horizontal discharge and rear suction by means of two propeller BLDC Inverter fans.
- Each module houses one Twin BLDC Rotatory compressor.
- Night Silent Mode available.
- Eurovent certified and ErP (Ecodesign) compliant.
- Four-way direction piping connection.





| Model Code | | | | AM040NXMDER/EU | AM050NXMDER/EU | AM060NXMDER/EU |
|---|---|---|---|---|---|---|
| Power Supply | | | Φ, V, Hz | 1Φ, 220~240 V, 50 Hz | 1Φ, 220~240 V, 50 Hz | 1Φ, 220~240 V, 50 Hz |
| Performance | hp | | hp | 4 | 5 | 6 |
| | Capacity | Cooling | kW | 12.1 | 14.0 | 15.5 |
| | | Heating | | 12.1 | 14.0 | 15.5 |
| Power | Power Input (Nominal) | Cooling | kW | 2.69 | 3.41 | 4.13 |
| | | Heating | | 2.58 | 3.11 | 3.65 |
| | Current Input (Nominal) | Cooling | A | 4.1 | 5.2 | 6.3 |
| | | Heating | | 3.8 | 4.5 | 5.3 |
| | Current | MCA | A | 22.0 | 24.0 | 30.0 |
| | | MFA | | 25 | 30 | 40 |
| Energy Efficiency[1] | EER (Nominal Cooling) | | - | 4.50 | 4.11 | 3.75 |
| | COP[1] (Nominal Heating) | | - | 4.69 | 4.50 | 4.25 |
| | SEER | | - | 10.50 | 10.10 | 9.50 |
| Compressor | Type | | - | Twin BLDC Rotary | Twin BLDC Rotary | Twin BLDC Rotary |
| | Output | | kW | 4.04 | 4.04 | 4.04 |
| | Oil | Type | - | PVE | PVE | PVE |
| | | Initial Charge | cc | 1,700 | 1,700 | 1,700 |
| Fan | Type | | - | Propeller/BLDC | Propeller/BLDC | Propeller/BLDC |
| | Discharge direction | | - | Horizontal | Horizontal | Horizontal |
| | Motor (Output) | | kW × n | 125.0 x 2 | 125.0 x 2 | 125.0 x 2 |
| | Airflow Rate | (H/M/L) | $m^3$/min | 100 | 100 | 100 |
| | | (H/M/L) | l/s | 1,666.7 | 1,666.7 | 1,666.7 |
| | External Static Pressure | (Min/Std/Max) | mmAq | 3 | 3 | 3 |
| Piping Connections | Liquid Pipe | | ø, mm | 9.52 | 9.52 | 9.52 |
| | | | ø, inch | 3/8 | 3/8 | 3/8 |
| | Gas Pipe | | ø, mm | 15.88 | 15.88 | 19.05 |
| | | | ø, inch | 5/8 | 5/8 | 3/4 |
| | Discharge Gas Pipe | | ø, mm | 15.88 | 15.88 | 15.88 |
| | | | ø, inch | 5/8 | 5/8 | 5/8 |
| | Installation Max. Length | | m | 150 | 150 | 150 |
| | Installation Max. Height | | m | 50 | 50 | 50 |
| Field Wiring | Transmission Cable | | m | 0.75~1.50 | 0.75~1.50 | 0.75~1.50 |
| Refrigerant | Type | | - | R410A | R410A | R410A |
| | Factory Charging | | kg | 3.2 | 3.2 | 3.3 |
| | | | kg / $tCO_2e$ | 6.7 | 6.7 | 6.9 |
| Sound[2] | Sound Pressure | | dB(A) | 52 | 52 | 53 |
| | Sound Power | | | 67 | 68 | 70 |
| External Dimensions | Net Weight | | kg | 97.0 | 97.0 | 100.0 |
| | Net Dimensions (W x H x D) | | mm | 940 x 1,210 x 330 | 940 x 1,210 x 330 | 940 x 1,210 x 330 |
| Operating Temperature Range | Cooling | | ℃ | -5.0~48.0 | -5.0~48.0 | -5.0~48.0 |
| | Heating | | ℃ | -25.0~26.0 | -25.0~26.0 | -25.0~26.0 |





| AM040NXMDGR/EU | AM050NXMDGR/EU | AM060NXMDGR/EU |
|---|---|---|
| 3Φ, 380~415 V, 50 Hz | 3Φ, 380~415 V, 50 Hz | 3Φ, 380~415 V, 50 Hz |
| 4 | 5 | 6 |
| 12.1 | 14.0 | 15.5 |
| 12.1 | 14.0 | 15.5 |
| 2.69 | 3.41 | 4.13 |
| 2.58 | 3.11 | 3.65 |
| 4.1 | 5.2 | 6.3 |
| 3.8 | 4.5 | 5.3 |
| 10.0 | 12.0 | 12.0 |
| 16 | 16 | 16 |
| 4.50 | 4.11 | 3.75 |
| 4.69 | 4.50 | 4.25 |
| 10.50 | 10.10 | 9.50 |
| Twin BLDC Rotary | Twin BLDC Rotary | Twin BLDC Rotary |
| 4.04 | 4.04 | 4.04 |
| PVE | PVE | PVE |
| 1,700 | 1,700 | 1,700 |
| Propeller/BLDC | Propeller/BLDC | Propeller/BLDC |
| Horizontal | Horizontal | Horizontal |
| 125.0 x 2 | 125.0 x 2 | 125.0 x 2 |
| 100 | 100 | 100 |
| 1,666.7 | 1,666.7 | 1,666.7 |
| 3 | 3 | 3 |
| 9.52 | 9.52 | 9.52 |
| 3/8 | 3/8 | 3/8 |
| 19.05 | 19.05 | 19.05 |
| 3/4 | 3/4 | 3/4 |
| 15.88 | 15.88 | 15.88 |
| 5/8 | 5/8 | 5/8 |
| 150 | 150 | 150 |
| 50 | 50 | 50 |
| 0.75~1.50 | 0.75~1.50 | 0.75~1.50 |
| R410A | R410A | R410A |
| 3.2 | 3.2 | 3.3 |
| 6.7 | 6.7 | 6.9 |
| 52 | 52 | 53 |
| 67 | 68 | 70 |
| 95.0 | 95.0 | 98.0 |
| 940 x 1,210 x 330 | 940 x 1,210 x 330 | 940 x 1,210 x 330 |
| -5.0~48.0 | -5.0~48.0 | -5.0~48.0 |
| -25.0~26.0 | -25.0~26.0 | -25.0~26.0 |

[1]Performances are based on the following test conditions:
- Cooling: Indoor temperature: 27 °C DB, 19 °C WB, Outdoor temperature: 35 °C DB, 24 °C WB
- Heating: Indoor temperature: 20 °C DB, 15 °C WB, Outdoor temperature: 7 °C DB, 6 °C WB
- Equivalent refrigerant piping: 7.5 m, Level differences: 0 m

[2]Sound pressure level is obtained in an anechoic room. Sound pressure level is a relative value, depending on the distance and acoustic environment. Sound pressure level may differ according to operating conditions. Sound power level is an absolute value that a sound source generates.



VRF

# Dimensional drawings

## DVM S Eco Heat Recovery (With Heat Recovery Changer Kit)

**AM***NXMD*R/EU**

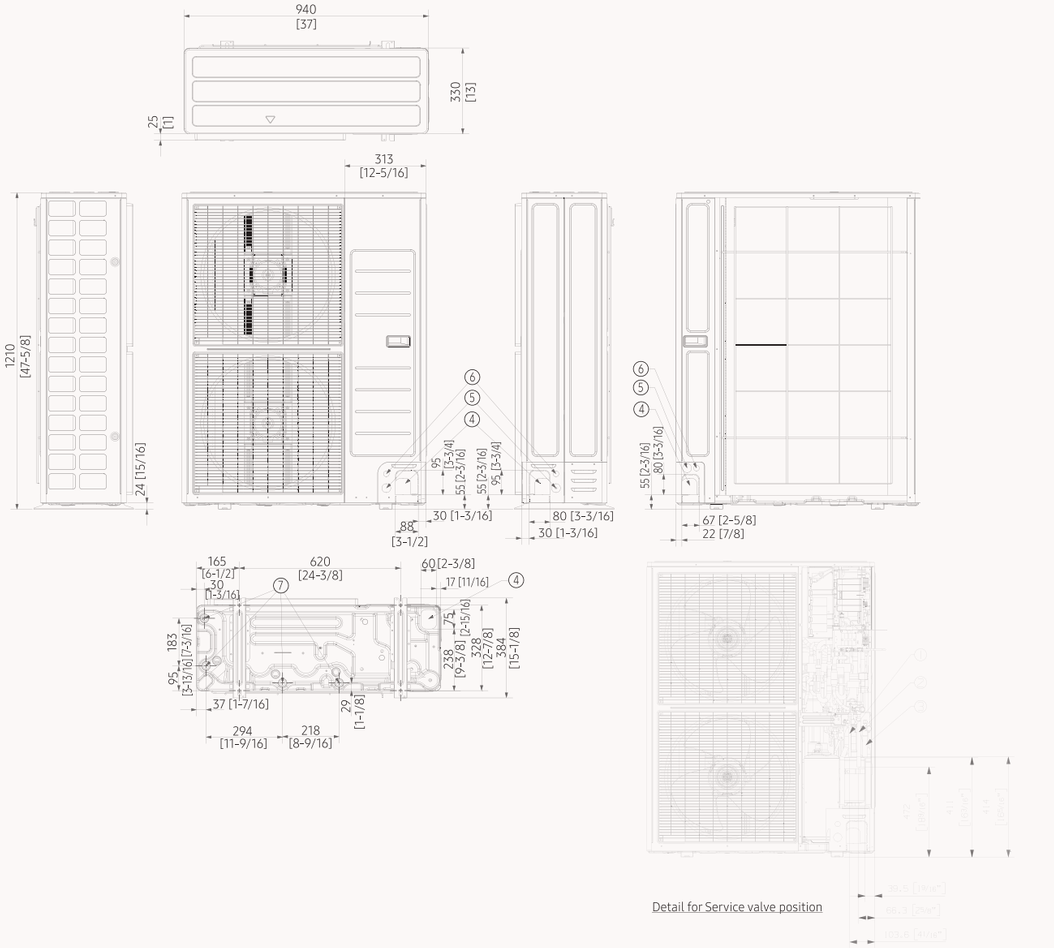


| NO | Name | Description | |
|---|---|---|---|
| | | **4/5 hp** | **6 hp** |
| 1 | Refrigerant liquid pipe | ø9.52 (ø3/8) | |
| 2 | Refrigerant gas pipe | ø15.88 (ø5/8) | ø19.05 (ø3/4) |
| 3 | Knock-out hole for pipe intake | Front/Side/Rear/Bottom | |
| 4 | Power wiring conduits | Front/Side/Rear, ø34.00 (ø1 3/8) | |
| 5 | Communication wiring conduits | Front/Side/Rear, ø22.00 (ø7/8) | |
| 6 | Drain holes | Connect with the provided drain plug. | |

# Specifications

## DVM S High EER Heat Recovery (3-Pipe)

- Vertical discharge and side-rear suction with by means of one (8~14 hp) or two (16~26 hp) propeller BLDC Inverter fan(s).
- Each module houses one (8~14 hp) or two (16~26 hp) Inverter Scroll compressors with Flash Injection technology.
- Night Silent Mode available.
- Pump Down function (leak detection).
- "Intelligent defrost" (air resistant factor added) technology to minimise defrost operation.
- Eurovent certified and ErP (Ecodesign) compliant.



| Model Name | | | | AM080JXVHGR/ET | AM100JXVHGR/ET | AM120JXVHGR/ET |
|---|---|---|---|---|---|---|
| Power Supply | | | Φ, #, V, Hz | 3Φ, 4, 380~415 V, 50 Hz | 3Φ, 4, 380~415 V, 50 Hz | 3Φ, 4, 380~415 V, 50 Hz |
| Mode | | | - | HEAT RECOVERY | HEAT RECOVERY | HEAT RECOVERY |
| Performance | hp | | hp | 8 | 10 | 12 |
| | Capacity | Cooling | kW | 22.4/22.4* | 28.0/28.0* | 33.6/33.6* |
| | | Heating | kW | 25.2/22.4* | 31.5/28.0* | 37.8/33.6* |
| | Maximum number of connectable indoor units | | ea | 14 | 18 | 21 |
| | Total capacity of the connected indoor units | Min. | kW | 11.2 | 14.0 | 16.8 |
| | | Max. | kW | 29.1 | 36.4 | 43.7 |
| Power | Power Input | Cooling | kW | 4.59/4.59* | 6.22/6.22* | 7.57/7.57* |
| | | Heating | kW | 4.59/4.08* | 5.89/5.23* | 7.56/6.72* |
| | Current Input | Cooling | A | 7.40 | 10.00 | 12.10 |
| | | Heating | A | 7.40 | 9.40 | 12.10 |
| | Current | Minimum SSC value | MVA | 3.1 | 4.5 | 5.3 |
| | | MCA | A | 18.0 | 21.1 | 25.0 |
| | | MFA | A | 25 | 32 | 32 |
| Energy Efficiency[1] | EER | Cooling | W/W | 4.88/4.88* | 4.50/4.50* | 4.44/4.44* |
| | COP[1] | Heating | W/W | 5.49/5.49* | 5.35/5.35* | 5.00/5.00* |
| | ESEER | | W/W | 8.00 | 7.43 | 7.23 |
| Compressor | Output | | kW x n | 5.18 x 1 | 6.39 x 1 | 6.39 x 1 |
| | Model Name | | - | DS-GB052FAV* x 1 | DS-GB066FAV* x 1 | DS-GB066FAV* x 1 |
| | Oil | Type | - | PVE | PVE | PVE |
| | | Initial Charge | cc x n | 1,100 x 1 | 1,100 x 1 | 1,100 x 1 |
| Fan | Type | | - | Propeller | Propeller | Propeller |
| | Discharge direction | | - | Top | Top | Top |
| | Number of Fans | | - | 1 | 1 | 1 |
| | Airflow Rate | | m³/min | 170 | 170 | 200 |
| | | | l/s | 2,833 | 2,833 | 3,333 |
| | External Static Pressure | Max. | mmAq | 8.00 | 8.00 | 8.00 |
| | | | Pa | 78.45 | 78.45 | 78.45 |
| Fan Motor | Type | | - | BLDC Motor | BLDC Motor | BLDC Motor |
| | Output | | W x n | 830 x 1 | 830 x 1 | 830 x 1 |
| Piping Connections | Liquid Pipe | | ø, mm | 9.52 | 9.52 | 12.70 |
| | | | ø, inch | 3/8 | 3/8 | 1/2 |
| | Gas Pipe | | ø, mm | 19.05 | 22.22 | 28.58 |
| | | | ø, inch | 3/4 | 7/8 | 1 1/8 |
| | High Pressure Gas Pipe (HR Only) | | ø, mm | 15.88 | 19.05 | 19.05 |
| | | | ø, inch | 5/8 | 3/4 | 3/4 |
| | Piping length (ODU-IDU) | Max. (Equiv.) | m | 200 [220] | 200 [220] | 200 [220] |
| | Piping length (1st Branch - IDU) | Max. | m | 90 | 90 | 90 |
| | Total piping length (System) | Max. | m | 1,000 | 1,000 | 1,000 |
| | Level difference (ODU in highest position) | Max. | m | 110 | 110 | 110 |
| | Level difference (IDU in highest position) | Max. | m | 110 | 110 | 110 |
| | Level Difference (IDU-IDU) | Max. | m | 40 | 40 | 40 |
| Wiring Connections | Transmission Cable | | mm² | 0.75 | 0.75 | 0.75 |
| | Remark | | - | F1, F2 | F1, F2 | F1, F2 |
| Refrigerant | Type | | - | R410A | R410A | R410A |
| | Factory Charging | | kg | 6.5 | 6.5 | 6.5 |
| | | | $tCO_2e$ | 13.6 | 13.6 | 13.6 |
| Sound [2] | Sound Pressure | Cooling | dB(A) | 57 | 58 | 62 |
| | | Heating | dB(A) | 59 | 60 | 64 |
| | Sound Power | | dB(A) | 77 | 79 | 81 |
| External Dimensions | Net Weight | | kg | 200.5 | 200.5 | 200.5 |
| | Net Dimensions (W x H x D) | | mm | 880 x 1,695 x 765 | 880 x 1,695 x 765 | 880 x 1,695 x 765 |
| Operating Temperature Range | Cooling | | ℃ | -15~48 | -15~48 | -15~48 |
| | Heating | | ℃ | -25~24 | -25~24 | -25~24 |

[1] Performances are based on the following test conditions:
- Cooling: Indoor temperature: 27 °C DB, 19 °C WB, Outdoor temperature: 35 °C DB, 24 °C WB
- Heating: Indoor temperature: 20 °C DB, 15 °C WB, Outdoor temperature: 7 °C DB, 6 °C WB
- Equivalent refrigerant piping: 7.5 m, Level differences: 0 m

[2] Sound pressure level is obtained in an anechoic room. Sound pressure level is a relative value, depending on the distance and acoustic environment. Sound pressure level may differ according to operating conditions. Sound power level is an absolute value that a sound source generates.

* Eurovent certified.



| AM140JXVHGR/ET | AM160JXVHGR/ET | AM180JXVHGR/ET | AM200JXVHGR/ET | AM220JXVHGR/ET | AM240MXVGNR/ET | AM260MXVGNR/ET |
|---|---|---|---|---|---|---|
| 3Φ, 4, 380~415 V, 50 Hz | 3Φ, 4, 380~415 V, 50 Hz | 3Φ, 4, 380~415 V, 50 Hz | 3Φ, 4, 380~415 V, 50 Hz | 3Φ, 4, 380~415 V, 50 Hz | 3Φ, 4, 380~415 V, 50/60 Hz | 3Φ, 4, 380~415 V, 50/60 Hz |
| HEAT RECOVERY | HEAT RECOVERY | HEAT RECOVERY | HEAT RECOVERY | HEAT RECOVERY | HEAT RECOVERY | HEAT RECOVERY |
| 14 | 16 | 18 | 20 | 22 | 24 | 26 |
| 40.0/40.0* | 45.0/45.0* | 50.4/50.4* | 56.0/56.0* | 61.6/61.6* | 67.2/67.2* | 72.8/72.8* |
| 45.0/40.0* | 50.4/45.0* | 56.7/50.4* | 63.0/56.0* | 69.3/61.6* | 75.6/67.2* | 81.9/72.8* |
| 26 | 29 | 32 | 36 | 40 | 43 | 47 |
| 20.0 | 22.5 | 25.2 | 28.0 | 30.8 | 33.6 | 36.4 |
| 52.0 | 58.5 | 65.5 | 72.8 | 80.1 | 87.4 | 94.6 |
| 8.89/8.89* | 10.92/10.92* | 10.68/12.32* | 12.50/13.83* | 15.75/15.88* | 16.00/18.61* | 17.33/20.92* |
| 9.62/8.55* | 10.75/8.95* | 10.52/10.02* | 12.75/11.22* | 15.86/12.91* | 15.43/13.20* | 17.06/15.17* |
| 14.30 | 17.50 | 17.10 | 20.00 | 25.30 | 29.80 | 27.80 |
| 15.40 | 17.20 | 16.90 | 20.50 | 25.40 | 21.20 | 27.40 |
| 5.3 | 6.6 | 7.6 | 8.0 | 8.6 | 12.5 | 12.2 |
| 25.0 | 32.0 | 39.2 | 42.0 | 44.6 | 55.0 | 60.0 |
| 32 | 40 | 50 | 63 | 63 | 63 | 75 |
| 4.50/4.50* | 4.12/4.12* | 4.72/4.09* | 4.48/4.05* | 3.91/3.88* | 4.20/3.61* | 4.20/3.48* |
| 4.68/4.68* | 4.69/5.03* | 5.39/5.03* | 4.94/4.99* | 4.37/4.77* | 4.90/5.09* | 4.80/4.80* |
| 7.78 | 7.38 | 7.25 | 6.82 | 6.43 | 7.18 | 7.17 |
| 6.39 x 1 | 4.39 x 2 | 6.39 x 2 | 6.39 x 2 | 6.39 x 2 | 6.76 x 2 | 7.81 x 2 |
| DS-GB066FAV* x 1 | DS-GA046FAV* x 2 | DS-GB066FAV* x 2 | DS-GB066FAV* x 2 | DS-GB066FAV* x 2 | DS-GB070FAV* x 2 | DS4GJ5080FV* x 2 |
| PVE | PVE | PVE | PVE | PVE | PVE | PVE |
| 1,100 x 1 | 900 x 2 | 1,100 x 2 | 1,100 x 2 | 1,100 x 2 | 1,100 x 2 | 1,400 x 2 |
| Propeller | Propeller | Propeller | Propeller | Propeller | Propeller | Propeller |
| Top | Top | Top | Top | Top | Top | Top |
| 2 | 2 | 2 | 2 | 2 | 2 | 2 |
| 255 | 255 | 290 | 290 | 290 | 340 | 340 |
| 4,250 | 4,250 | 4,833 | 4,833 | 4,833 | 5,667 | 5,667 |
| 8.00 | 8.00 | 8.00 | 8.00 | 8.00 | 8.00 | 8.00 |
| 78.45 | 78.45 | 78.45 | 78.45 | 78.45 | 78.45 | 78.45 |
| BLDC Motor | BLDC Motor | BLDC Motor | BLDC Motor | BLDC Motor | BLDC Motor | BLDC Motor |
| 620 x 2 | 620 x 2 | 620 x 2 | 620 x 2 | 620 x 2 | 620 x 2 | 620 x 2 |
| 12.70 | 12.70 | 15.88 | 15.88 | 15.88 | 15.88 | 19.05 |
| 1/2 | 1/2 | 5/8 | 5/8 | 5/8 | 5/8 | 3/4 |
| 28.58 | 28.58 | 28.58 | 28.58 | 28.58 | 34.92 | 34.92 |
| 1 1/8 | 1 1/8 | 1 1/8 | 1 1/8 | 1 1/8 | 1 3/8 | 1 3/8 |
| 22.22 | 22.22 | 22.22 | 28.58 | 28.58 | 34.92 | 28.58 |
| 7/8 | 7/8 | 7/8 | 1 1/8 | 1 1/8 | 1 3/8 | 1 1/8 |
| 200 [220] | 200 [220] | 200 [220] | 200 [220] | 200 [220] | 200 [220] | 200 [220] |
| 90 | 90 | 90 | 90 | 90 | 90 | 90 |
| 1,000 | 1,000 | 1,000 | 1,000 | 1,000 | 1,000 | 1,000 |
| 110 | 110 | 110 | 110 | 110 | 110 | 110 |
| 110 | 110 | 110 | 110 | 110 | 110 | 110 |
| 40 | 40 | 40 | 40 | 40 | 40 | 40 |
| 0.75 | 0.75 | 0.75 | 0.75 | 0.75 | 0.75 | 0.75 |
| F1, F2 | F1, F2 | F1, F2 | F1, F2 | F1, F2 | F1, F2 | F1, F2 |
| R410A | R410A | R410A | R410A | R410A | R410A | R410A |
| 9.4 | 9.4 | 8.4 | 11.0 | 11.0 | 14.0 | 14.0 |
| 19.6 | 19.6 | 17.5 | 23.0 | 23.0 | 29.2 | 29.2 |
| 61 | 62 | 63 | 64 | 65 | 69 | 69 |
| 63 | 66 | 67 | 67 | 67 | 71 | 71 |
| 81 | 82 | 85 | 86 | 88 | 90 | 90 |
| 254.0 | 285.0 | 302.0 | 314.0 | 314.0 | 350.0 | 358.0 |
| 1,295 x 1,695 x 765 | 1,295 x 1,695 x 765 | 1,295 x 1,695 x 765 | 1,295 x 1,695 x 765 | 1,295 x 1,695 x 765 | 1,295 x 1,795 x 765 | 1,295 x 1,795 x 765 |
| -15~48 | -15~48 | -15~48 | -15~48 | -15~48 | -15~48 | -15~48 |
| -25~24 | -25~24 | -25~24 | -25~24 | -25~24 | -25~24 | -25~24 |

# Dimensional drawings

## DVM S High EER Heat Recovery (3-Pipe)

### AM080/100/120JXVHGR

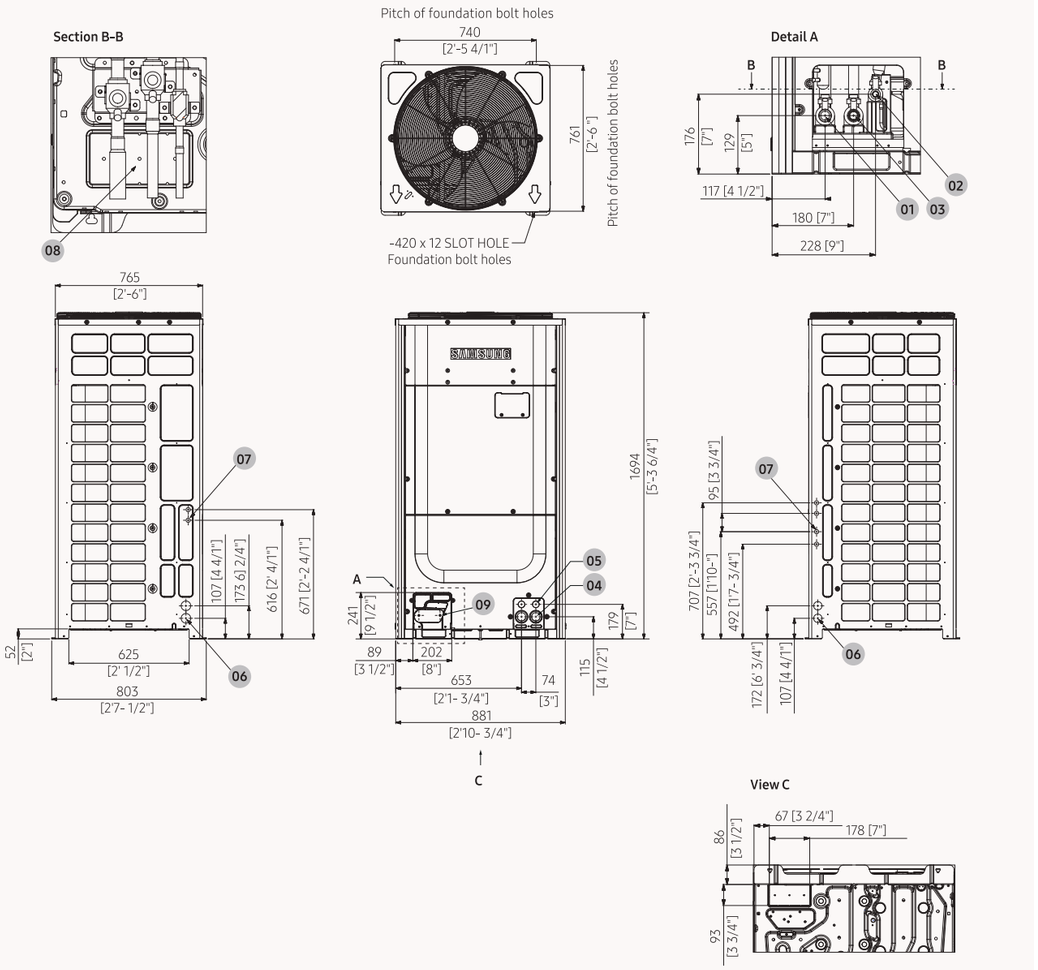


| NO | Name | Description |
|---|---|---|
| 1 | Low Pressure Gas Ref. pipe | See note 4 |
| 2 | High Pressure Gas Ref. pipe | See note 4 |
| 3 | Liquid Ref. pipe | See note 4 |
| 4 | Power wiring conduits | ø44 |
| 5 | Communication wiring conduits | ø34 |
| 6 | Power wiring conduits | ø44 |
| 7 | Communication wiring conduits | ø22 |
| 8 | Knock-out hole for Ref. piping (bottom) | |
| 9 | Knock-out hole for Ref. piping (front) | |

1. Detail A and SECTION B-B indicate the dimensions after fixing the attached piping.
2. Item 4-9: Knock-out hole.
3. View C indicates the dimensions of the knock-out hole (bottom).
4. Pipe [ø, mm (inch)]: Brazing connection.

### AM140/160/180/200/220JXVHGR

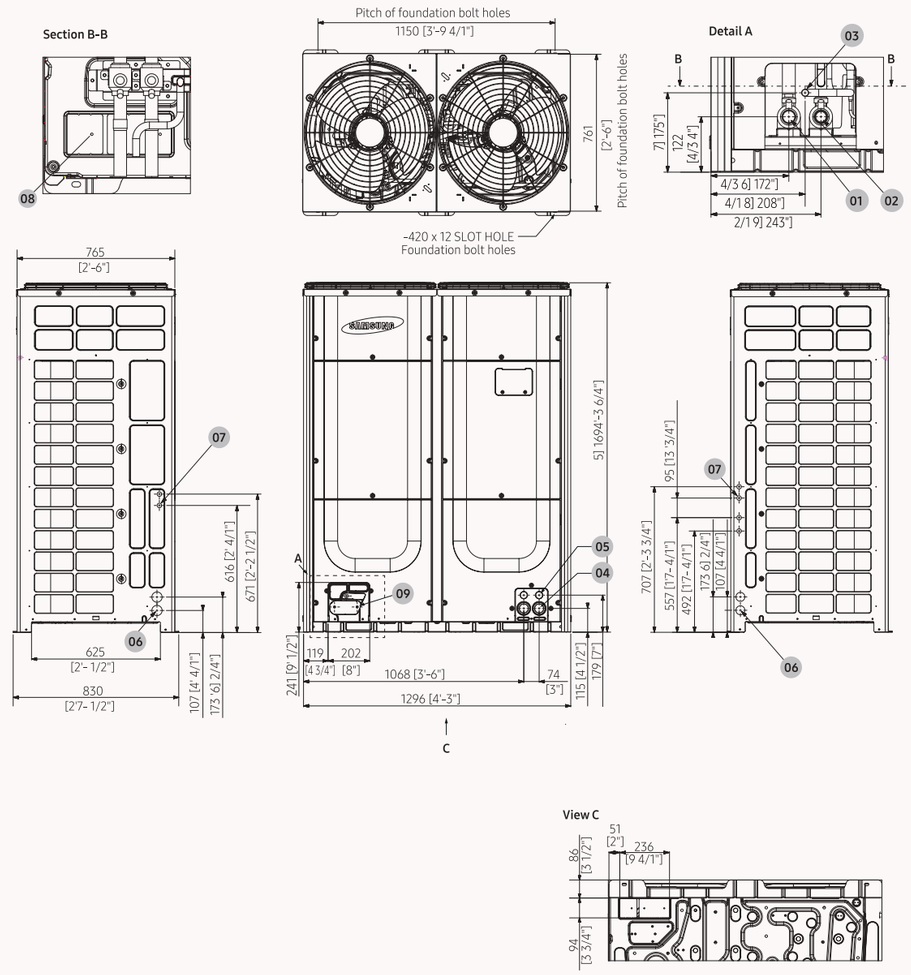


| NO | Name | Description |
|---|---|---|
| 1 | Low Pressure Gas Ref. pipe | See note 4 |
| 2 | High Pressure Gas Ref. pipe | See note 4 |
| 3 | Liquid Ref. pipe | See note 4 |
| 4 | Power wiring conduits | ø44 |
| 5 | Communication wiring conduits | ø34 |
| 6 | Power wiring conduits | ø44 |
| 7 | Communication wiring conduits | ø22 |
| 8 | Knock-out hole for Ref. piping (bottom) | |
| 9 | Knock-out hole for Ref. piping (front) | |

1. Detail A and SECTION B-B indicate the dimensions after fixing the attached piping.
2. Item 4-9: Knock-out hole.
3. View C indicates the dimensions of the knock-out hole (bottom).
4. Pipe [ø, mm (inch)]: Brazing connection.

# Specifications

## DVM S Water

- Water Cooled, Variable Refrigerant Flow Heat Pump/ Heat Recovery Unit R410A.
- Suitable for indoor and outdoor installation
- Each unit houses one (8~12 hp) or two (20~30 hp) Inverter Scroll compressors with Flash Injection technology.







| Model Name | | | | | AM080MXWANR/EU | AM100MXWANR/EU | AM120MXWANR/EU | AM200MXWANR/EU | AM300KXWANR/EU |
|---|---|---|---|---|---|---|---|---|---|
| Power Supply | | | | Φ, #, V, Hz | 3Φ, 4, 380~415 V, 50/60 Hz | 3Φ, 4, 380~415 V, 50/60 Hz | 3Φ, 4, 380~415 V, 50/60 Hz | 3Φ, 4, 380~415 V, 50/60 Hz | 3Φ, 4, 380~415 V, 50/60 Hz |
| Performance | hp | | | hp | 8 | 10 | 12 | 20 | 30 |
| | Capacity (Nominal) | Cooling | | kW | 22.4 | 28.0 | 33.6 | 56.0 | 84 |
| | | Heating | | kW | 25.2 | 31.5 | 37.8 | 63 | 94.5 |
| | Maximum number of connectable indoor units | | | ea | 14 | 18 | 22 | 36 | 55 |
| | Total capacity of the connected indoor units | Min. | | kW | 11.2 | 14.0 | 16.8 | 28.0 | 42.0 |
| | | Max. | | kW | 29.1 | 36.4 | 43.7 | 72.8 | 109.2 |
| Power | Power Input (Nominal) | Cooling | | kW | 3.67 | 4.87 | 6.00 | 10.77 | 16.80 |
| | | Heating | | | 3.97 | 5.04 | 6.25 | 10.86 | 16.88 |
| | Current Input (Nominal) | Cooling | | A | 5.9 | 8.1 | 9.6 | 17.3 | 26.4 |
| | | Heating | | | 6.4 | 8.4 | 10.0 | 17.4 | 26.5 |
| | Current | Minimum SSC value | | MVA | 3.9 | 3.9 | 4.8 | 7.7 | - |
| | | MCA | | A | 16.1 | 16.1 | 20.0 | 32.2 | 48.0 |
| | | MFA | | A | 20 | 20 | 25 | 40 | 63 |
| COP[1] | Nominal Cooling | | | W/W | 6.10 | 5.75 | 5,60 | 5.20 | 5.00 |
| | Nominal Heating | | | W/W | 6.35 | 6.25 | 6.05 | 5.80 | 5.60 |
| Compressor | Type | | | - | Inverter Scroll | Inverter Scroll | Inverter Scroll | Inverter Scroll | SSC Scroll x 2 |
| | Output | | | kW × n | 4.96 x 1 | 4.96 x 1 | 6.13 x 1 | 4.96 x 2 | 6.75 x 2 |
| | Oil | Type | | - | PVE | PVE | PVE | PVE | PVE |
| | | Initial Charge | | cc | 3,900 | 3,900 | 3,900 | 6,200 | 6,200 |
| Condenser | Type | | | Type | Plate Heat Exchanger | Plate Heat Exchanger | Plate Heat Exchanger | Plate Heat Exchanger | Plate Heat Exchanger |
| | Pipe Size | | | ø, inch | PT 1 1/4 | PT 1 1/4 | PT 1 1/4 | PT 1 1/4 | PT 2 |
| | Pressure Drop | | | kPa | 22 | 30 | 43 | 54 | 50 |
| | Water Flow Rate | | | l/min | 80 | 96 | 114 | 190 | 285 |
| | Max. Pressure | | | MPa | 1.96 | 1.96 | 1.96 | 1.96 | 1.96 |
| | Liquid Pipe | | | ø, mm | 9.52 | 9.52 | 12.70 | 15.88 | 19.05 |
| | | | | ø, inch | 3/8 | 3/8 | 1/2 | 5/8 | 3/4 |
| | Gas Pipe | | | ø, mm | 19.05 | 22.22 | 28.58 | 28.58 | 34.92 |
| | | | | ø, inch | 3/4 | 7/8 | 1 1/8 | 1 1/8 | 1 3/8 |
| Piping Connections | Discharge Gas Pipe | | | ø, mm | 15.88 | 19.05 | 19.05 | 28.58 | 28.58 |
| | | | | ø, inch | 5/8 | 3/4 | 3/4 | 1 1/8 | 1 1/8 |
| | Piping length | Outdoor-Indoor | Max. | m | 170 (190) | 170 (190) | 170 (190) | 170 (190) | 170 (190) |
| | | After branch | Max. | m | 90 | 90 | 90 | 90 | 90 |
| | Total piping length | System | Actual | m | 500 | 500 | 500 | 500 | 500 |
| | Level difference | Outdoor-Indoor | Outdoor unit in highest position | m | 50 | 50 | 50 | 50 | 50 |
| | | | Indoor unit in highest position | m | 40 | 40 | 40 | 40 | 40 |
| | | Indoor-Indoor | Max. | m | 50 | 50 | 50 | 50 | 50 |
| Wiring Connections | Communication | Minimum | | mm² | 0.75 | 0.75 | 0.75 | 0.75 | 0.75 |
| | | Remark | | - | F1, F2 | F1, F2 | F1, F2 | F1, F2 | F1, F2 |
| Refrigerant | Type | | | - | R410A | R410A | R410A | R410A | R410A |
| | Factory Charging | | | kg | 5.5 | 5.8 | 6.0 | 9.8 | 11.0 |
| | | | | $tCO_2e$ | 11.48 | 12.11 | 12.53 | 20.46 | 22.96 |
| Sound [2] | Sound Pressure | | Cooling | | 48 | 48 | 50 | 51 | 55 |
| | | | Heating | dB(A) | 51 | 51 | 52 | 52 | 58 |
| | Sound Power | | | | 70 | 70 | 70 | 73 | 75 |
| External Dimensions | Net Weight | | | kg | 160.0 | 160.0 | 160.0 | 240.0 | 280.0 |
| | Net Dimensions (W x H x D) | | | mm | 770 x 1,000 x 545 | 770 x 1,000 x 545 | 770 x 1,000 x 545 | 1,100 x 1,000 x 545 | 1,100 x 1,000 x 545 |
| Operating Temperature Range | Cooling | | | °C | 10.0~45.0 | 10.0~45.0 | 10.0~45.0 | 10.0~45.0 | 10.0~45.0 |
| | Heating | | | °C | 10.0~45.0 | 10.0~45.0 | 10.0~45.0 | 10.0~45.0 | 10.0~45.0 |

[1]Performances are based on the following test conditions:
- Cooling: Indoor temperature: 27 °C DB, 19 °C WB, Inlet water temperature: 30 °C
- Heating: Indoor temperature: 20 °C DB, 15 °C WB, Inlet water temperature: 20 °C
- Equivalent refrigerant piping: 7.5 m, Level differences: 0 m

[2]Sound pressure level is obtained in an anechoic room. Sound pressure level is a relative value, depending on the distance and acoustic environment. Sound pressure level may differ according to operating conditions. Sound power level is an absolute value that a sound source generates.



VRF

# Dimensional Drawing

## DVM S Water

### AM080/100/120MXWANR

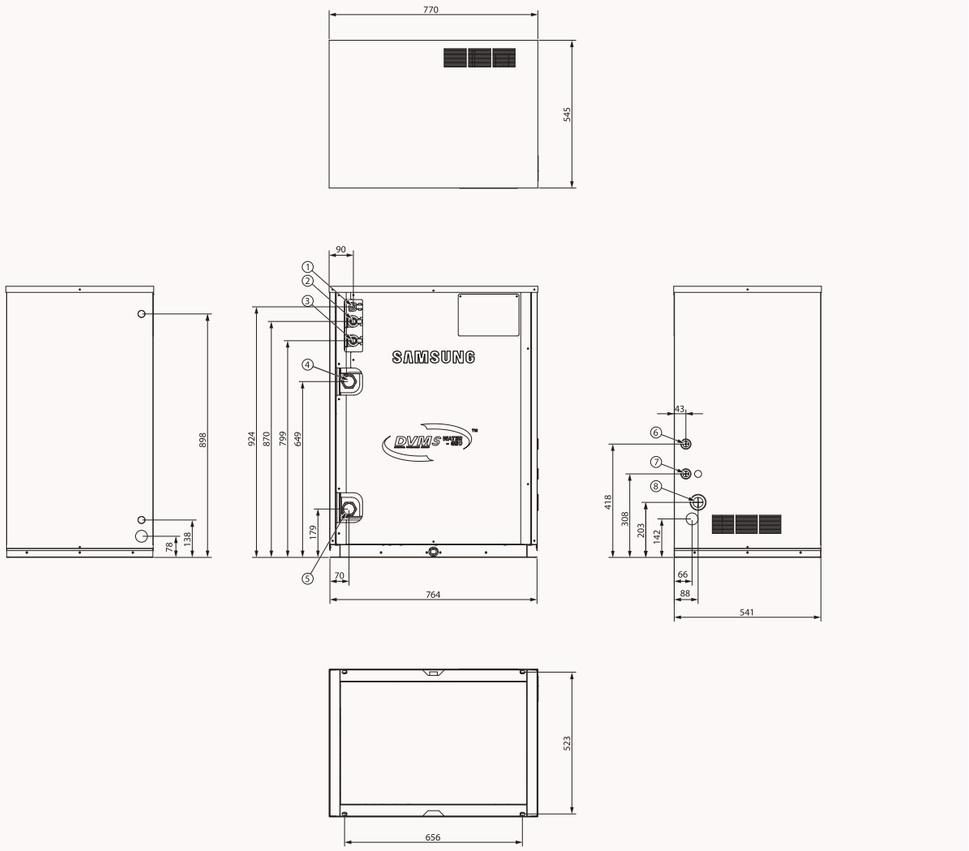


| NO | Name | Description |
|---|---|---|
| 1 | Liquid Ref. pipe | ø19.05 (3/4) |
| 2 | High Pressure Gas Ref. pipe | ø28.58 (1 1/8) |
| 3 | Low Pressure Gas Ref. pipe | ø 34.92 (1 3/8) |
| 4 | Water outlet pipe | PT 2 |
| 5 | Water inlet pipe | PT 2 |
| 6 | Communication wiring conduits | |
| 7 | External contact wiring | |
| 8 | Power wiring conduits | |

### AM200MXWANR

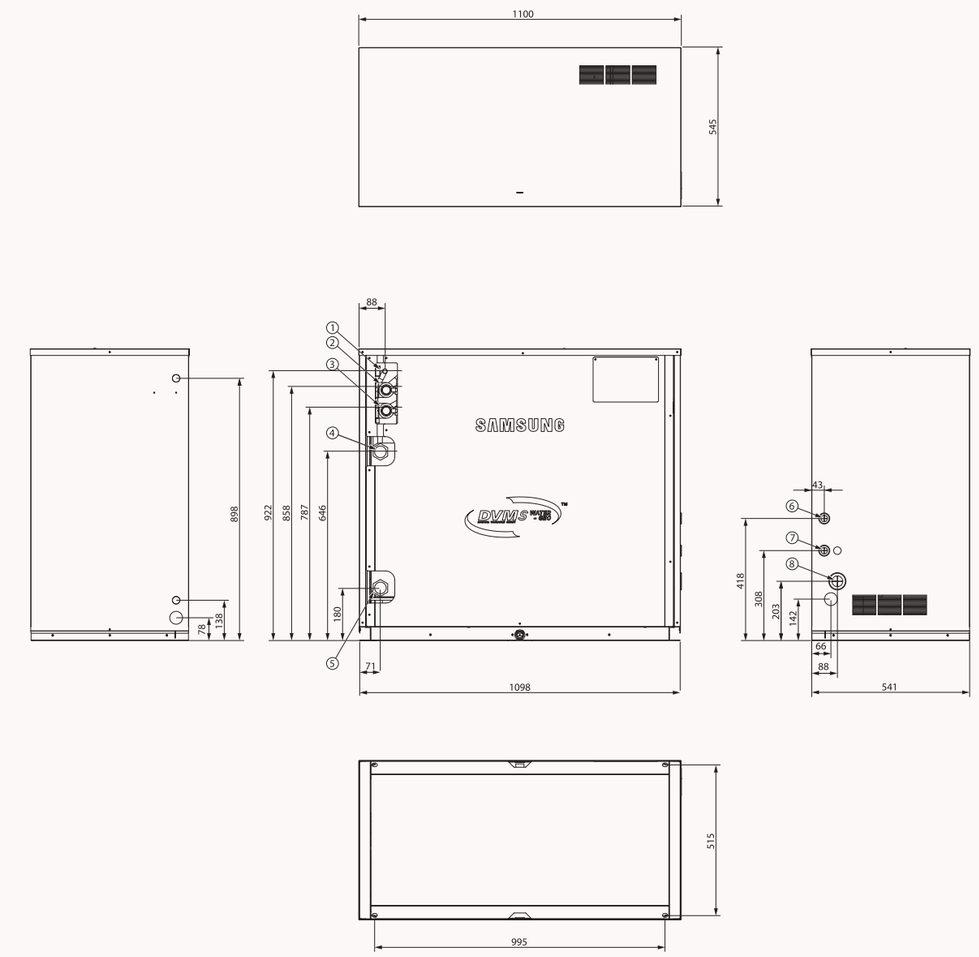


| NO | Name | Description |
|---|---|---|
| 1 | Liquid Ref. pipe | 15.88 (5/8) |
| 2 | High Pressure Gas Ref. pipe | ø28.58 (11/8) |
| 3 | Low Pressure Gas Ref. pipe | ø28.58 (11/8) |
| 4 | Water outlet pipe | PT 1 1/4 |
| 5 | Water inlet pipe | PT 1 1/4 |
| 6 | Communication wiring conduits | |
| 7 | External contact wiring | |
| 8 | Power wiring conduits | |

# Dimensional Drawing

## DVM S Water

**AM300MXWANR**

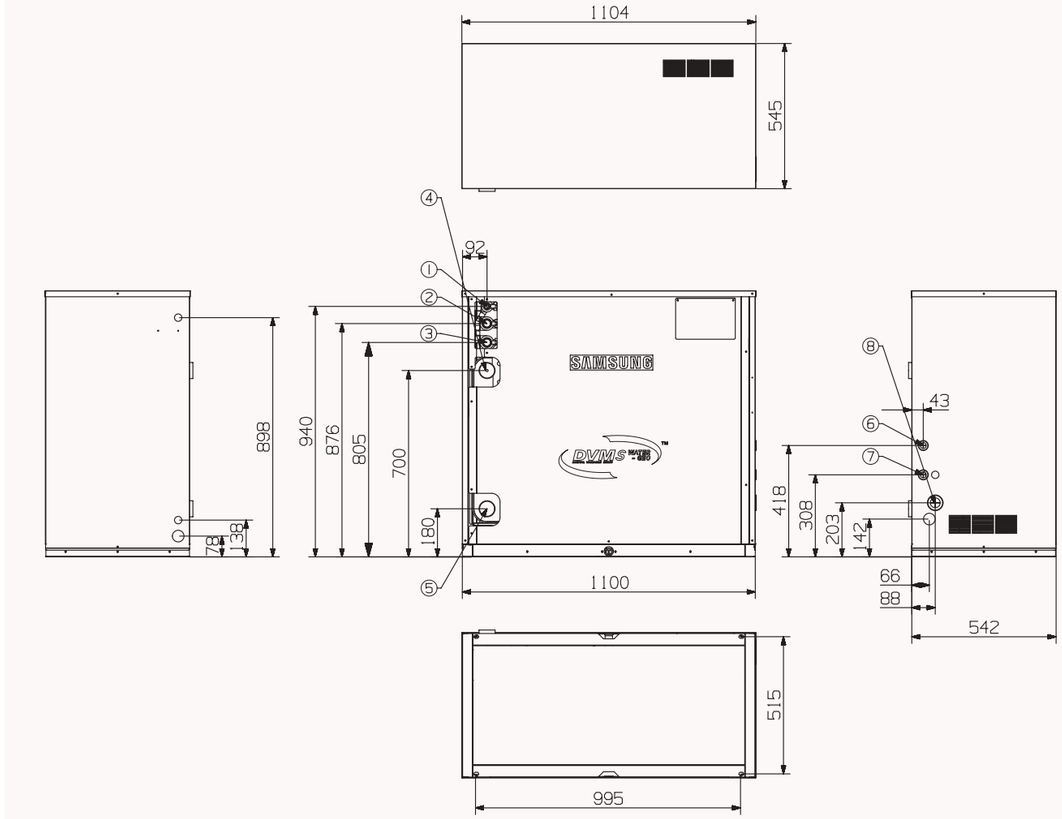


| NO | Name | Description |
|---|---|---|
| 1 | Liquid Ref. pipe | ø19.05 (3/4) |
| 2 | High Pressure Gas Ref. pipe | ø28.58 (1 1/8) |
| 3 | Low Pressure Gas Ref. pipe | ø 34.92 (1 3/8) |
| 4 | Water outlet pipe | PT 2 |
| 5 | Water inlet pipe | PT 2 |
| 6 | Communication wiring conduits | |
| 7 | External contact wiring | |
| 8 | Power wiring conduits | |





VRF

# Specifications

## 360 Cassette

- 360 degree air supply.
- Bladeless discharge. Booster fans can be individually controlled, allowing for completely horizontal flow discharge. Coandă effect is created even without ceiling.
- Built-in condensation drain pump.
- Predisposition of the air inlet to let fresh air in.
- Compatible with Wi-Fi Kit controller.
- Circular or square cassette panel.



| Model | | | | AM045KN4DEH/EU | AM056KN4DEH/EU | AM071KN4DEH/EU |
|---|---|---|---|---|---|---|
| Power Supply | | | Φ, #, V, Hz | 1Φ, 2, 220~240 V, 50 Hz | 1Φ, 2, 220~240 V, 50 Hz | 1Φ, 2, 220~240 V, 50 Hz |
| Performance | Capacity (Nominal) | Cooling | kW | 4.5 | 5.6 | 7.1 |
| | | Heating | | 5.0 | 6.3 | 8.0 |
| Power | Power Input (Nominal) | Cooling | W | 26 | 30 | 34 |
| | | Heating | | 26 | 30 | 34 |
| | Current Input (Nominal) | Cooling | A | 0.18 | 0.21 | 0.25 |
| | | Heating | | 0.18 | 0.21 | 0.25 |
| Fan | Motor | Type | - | Turbo Fan | Turbo Fan | Turbo Fan |
| | | Output x n | w | 65 x 1 | 65 x 1 | 65 x 1 |
| | Airflow Rate | H/M/L (UL) | $m^3$/min | 14.50/13.50/12.50 | 16.00/14.50/13.50 | 18.00/16.00/14.00 |
| | | | l/s | 241.67/225.00/208.33 | 266.67/241.67/225.00 | 300.00/266.67/233.33 |
| Piping Connections | Liquid Pipe | | ø, mm | 6.35 | 6.35 | 9.52 |
| | | | ø, inch | 1/4 | 1/4 | 3/8 |
| | Gas Pipe | | ø, mm | 12.70 | 12.70 | 15.88 |
| | | | ø, inch | 1/2 | 1/2 | 5/8 |
| | Drain Pipe | | ø, mm | VP25 (OD 32, ID 25) | VP25 (OD 32, ID 25) | VP25 (OD 32, ID 25) |
| Field Wiring | Power Source Wire | | $mm^2$ | 1.5~2.5 | 1.5~2.5 | 1.5~2.5 |
| | Transmission Cable | | $mm^2$ | 0.75~1.50 | 0.75~1.50 | 0.75~1.50 |
| Refrigerant | Type | | - | R410A | R410A | R410A |
| | Control Method | | - | EEV INCLUDED | EEV INCLUDED | EEV INCLUDED |
| Sound [2] | Pressure | (H/M/L) | dB(A) | 33/31/29 | 34/32/29 | 36/33/30 |
| | Power | Cooling | | 50 | 51 | 53 |
| Dimension | Net Weight | | kg | 21.0 | 21.0 | 21.0 |
| | Net Dimensions (W x H x D) | | mm | 947 x 281 x 947 | 947 x 281 x 947 | 947 x 281 x 947 |
| Panel | Model Name | | - | PC4NUDMAN | PC4NUDMAN | PC4NUDMAN |



| AM090KN4DEH/EU | AM112KN4DEH/EU | AM128KN4DEH/EU | AM140KN4DEH/EU |
|---|---|---|---|
| 1Φ, 2, 220~240 V, 50 Hz | 1Φ, 2, 220~240 V, 50 Hz | 1Φ, 2, 220~240 V, 50 Hz | 1Φ, 2, 220~240 V, 50 Hz |
| 9.0 | 11.2 | 12.8 | 14.0 |
| 10.0 | 12.5 | 13.8 | 16.0 |
| 55 | 53 | 77 | 91 |
| 55 | 53 | 77 | 91 |
| 0.42 | 0.41 | 0.62 | 0.75 |
| 0.42 | 0.41 | 0.62 | 0.75 |
| Turbo Fan | Turbo Fan | Turbo Fan | Turbo Fan |
| 65 x 1 | 97 x 1 | 97 x 1 | 97 x 1 |
| 22.00/18.50/16.00 | 25.50/21.00/17.50 | 29.50/24.00/19.00 | 31.50/26.50/21.00 |
| 366.67/308.33/266.67 | 425.00/350.00/291.67 | 491.67/400.00/316.67 | 525.00/441.67/350.00 |
| 9.52 | 9.52 | 9.52 | 9.52 |
| 3/8 | 3/8 | 3/8 | 3/8 |
| 15.88 | 15.88 | 15.88 | 15.88 |
| 5/8 | 5/8 | 5/8 | 5/8 |
| VP25 (OD 32, ID 25) | VP25 (OD 32, ID 25) | VP25 (OD 32, ID 25) | VP25 (OD 32, ID 25) |
| 1.5~2.5 | 1.5~2.5 | 1.5~2.5 | 1.5~2.5 |
| 0.75~1.50 | 0.75~1.50 | 0.75~1.50 | 0.75~1.50 |
| R410A | R410A | R410A | R410A |
| EEV INCLUDED | EEV INCLUDED | EEV INCLUDED | EEV INCLUDED |
| 40/36/32 | 40/36/32 | 42/38/33 | 44/40/35 |
| 57 | 58 | 60 | 61 |
| 21.0 | 24.0 | 24.0 | 24.0 |
| 947 x 281 x 947 | 947 x 365 x 947 | 947 x 365 x 947 | 947 x 365 x 947 |
| PC4NUDMAN | PC4NUDMAN | PC4NUDMAN | PC4NUDMAN |

### Accessories



Wireless Remote Controller

AR-KH03E



Simple Type Controller

MWR-SH00N



Touch Controller

MWR-SH11N



Wired Remote Controller

MWR-WE13N



Wired Remote Controller

MWR-WG00*N



Wi-Fi Kit

MIM-H04EN



External Thermostat

MRW-TA



Panel (Mandatory)

PC4NUDMAN



Panel (Mandatory)

PC4NUNMAN



Panel (Mandatory)

PC4NBDMAN



Panel (Mandatory)

PC4NBNMAN

# Dimensional drawings

## 360 Cassette (square)

AM045KN4DEH/EU, AM056KN4DEH/EU, AM071KN4DEH/EU, AM090KN4DEH/EU

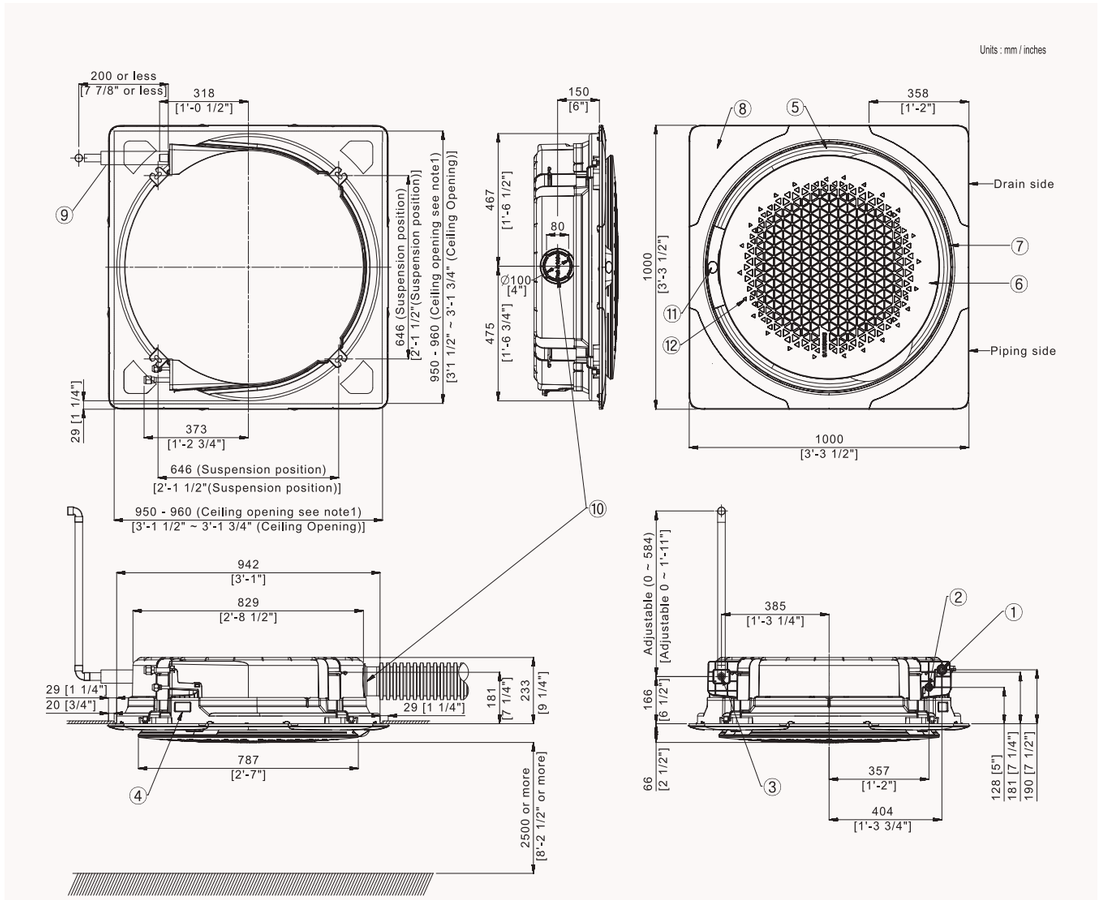


| NO | Name |
|---|---|
| 1 | Refrigerant liquid pipe |
| 2 | Refrigerant gas pipe |
| 3 | Condensate drain |
| 4 | Power supply/communication wiring conduits |
| 5 | Air discharge opening |
| 6 | Air suction grille |
| 7 | Suction rim for booster fan |
| 8 | Corner decoration cover |
| 9 | Drain hose |
| 10 | Fresh air intake knock-out hole |
| 11 | Display window |
| 12 | Infrared receiver |

1. Make sure the spacing between the ceiling and the cassette is no more than 29 mm [1 1/4"]. Max ceiling opening: 960 mm [3'1 3/4"]
2. When the conditions exceed 30 °C and RH 80 % in the ceiling or fresh air inducted into the ceiling, additional insulation is required (polythene foam, thickness 10 mm [3/8"] or more)
3. Open type panel model code: PC4NUDMAN

AM112KN4DEH/EU, AM128KN4DEH/EU AM140KN4DEH/EU

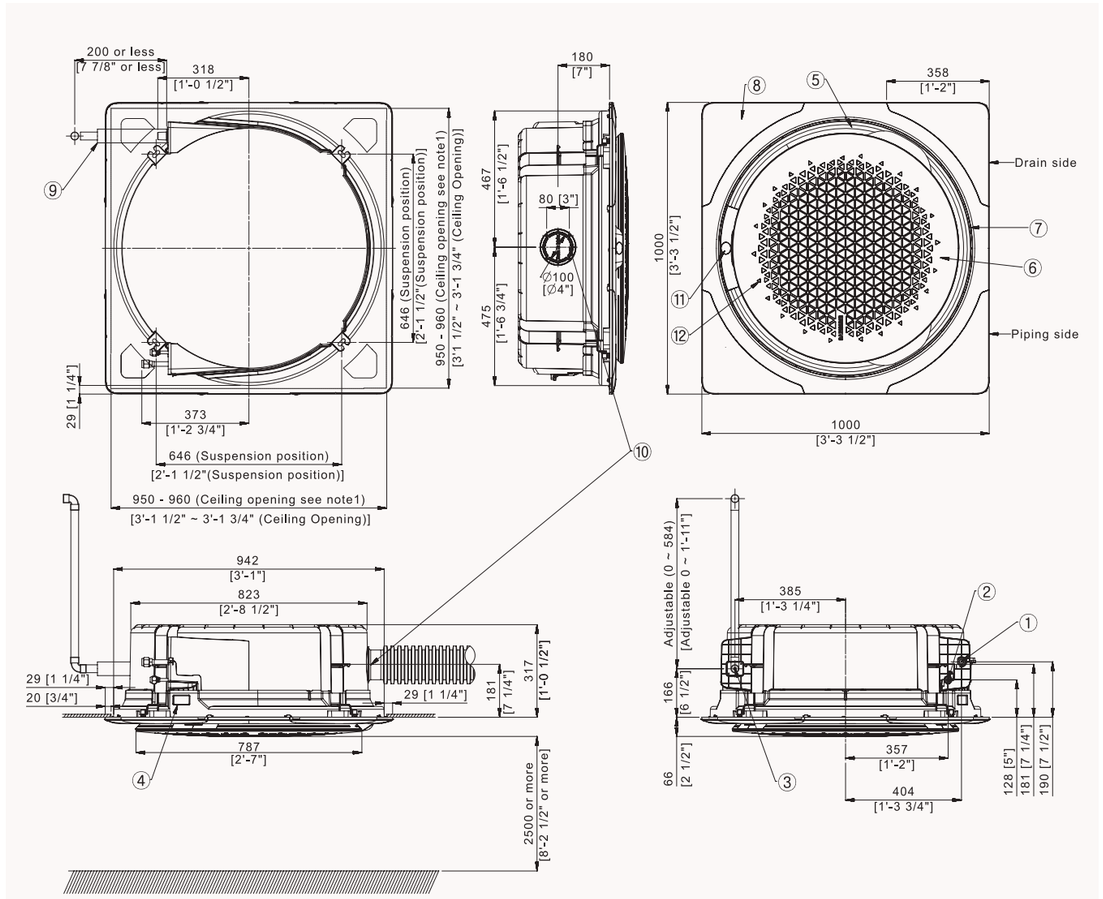


| NO | Name |
|---|---|
| 1 | Refrigerant liquid pipe |
| 2 | Refrigerant gas pipe |
| 3 | Condensate drain |
| 4 | Power supply/communication wiring conduits |
| 5 | Air discharge opening |
| 6 | Air suction grille |
| 7 | Suction rim for booster fan |
| 8 | Corner decoration cover |
| 9 | Drain hose |
| 10 | Fresh air intake knock-out hole |
| 11 | Display window |
| 12 | Infrared receiver |

1. Make sure the spacing between the ceiling and the cassette is no more than 29 mm [1 1/4"]. Max ceiling opening: 960 mm [3'1 3/4"]
2. When the conditions exceed 30 °C and RH 80 % in the ceiling or fresh air inducted into the ceiling, additional insulation is required (polythene foam, thickness 10 mm [3/8"] or more)
3. Open type panel model code: PC4NUDMAN

# Dimensional drawings

## 360 Cassette (circular)

### AM045KN4DEH/EU, AM056KN4DEH/EU, AM071KN4DEH/EU, AM090KN4DEH/EU

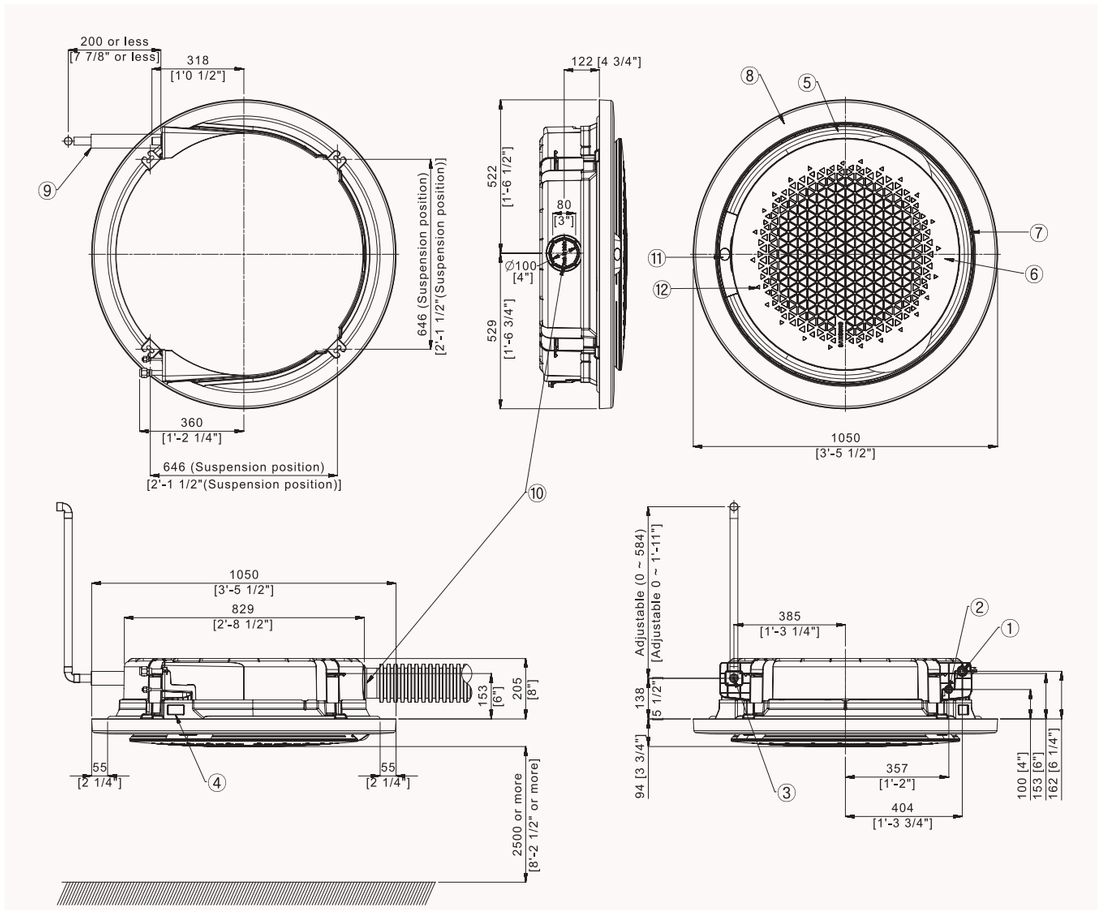


| NO | Name |
|---|---|
| 1 | Refrigerant liquid pipe |
| 2 | Refrigerant gas pipe |
| 3 | Condensate drain |
| 4 | Power supply/communication wiring conduits |
| 5 | Air discharge opening |
| 6 | Air suction grille |
| 7 | Suction rim for booster fan |
| 8 | Corner decoration cover |
| 9 | Drain hose |
| 10 | Fresh air intake knock-out hole |
| 11 | Display window |
| 12 | Infrared receiver |

| Category | Inspection hole | | |
|---|---|---|---|
| | Recessed installation | | Exposed installation |
| | Integrated | Suspended | |
| Square Panel | 1 ea | - | |
| Circle Panel | 2 ea | | |

1. Make sure the spacing between the ceiling and the cassette is no more than 10 mm [3/8"].
2. When the conditions exceed 30 °C and RH 80 % in the ceiling or fresh air inducted into the ceiling, additional insulation is required (polythene foam, thickness 10 mm [3/8"] or more)
3. Open type panel model code: PC4NUNMAN
4. The circular panel is available by default in the exposed installation.
5. Make inspection holes on the ceiling for easier installation and maintenance, as shown in the following table. (An inspection hole must be at least 450 mm x 450 mm in size.)
6. A suspended ceiling structure can substitute for the inspection holes.

### AM112KN4DEH/EU, AM128KN4DEH/EU, AM140KN4DEH/EU

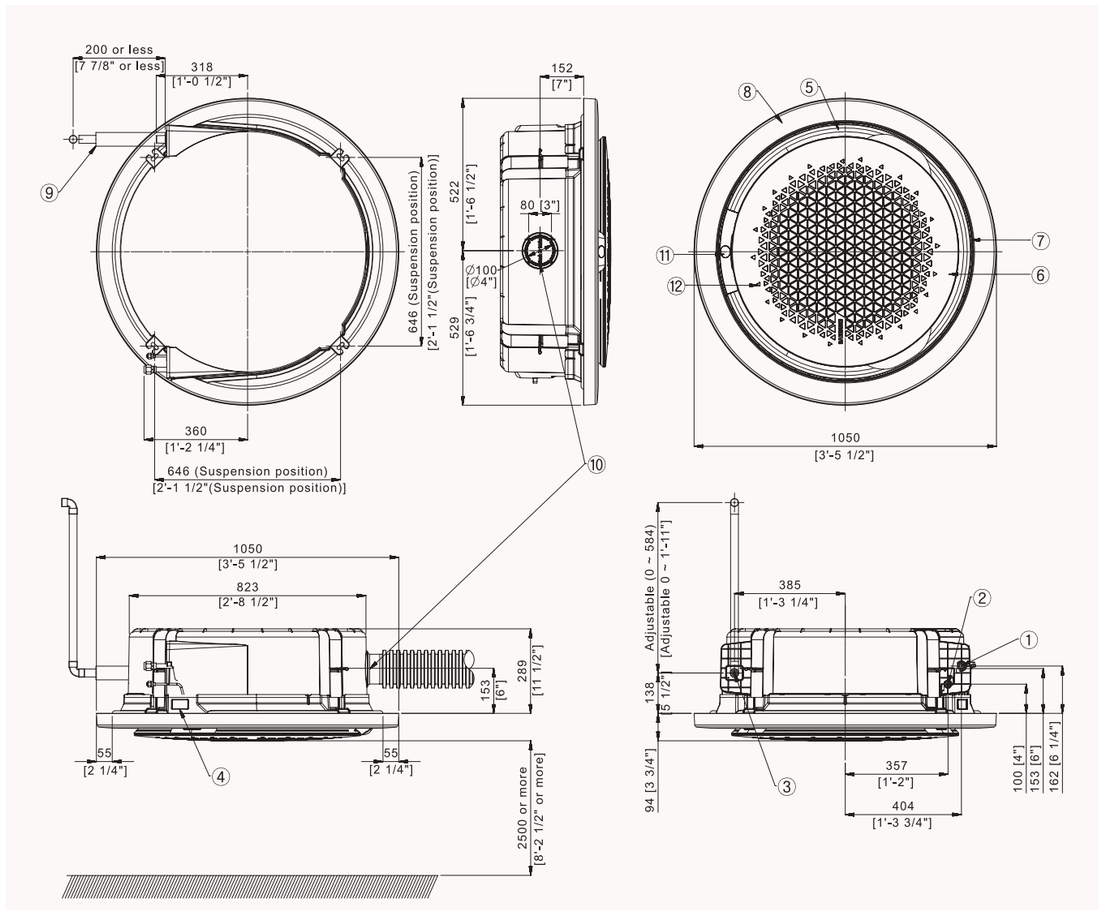


| NO | Name |
|---|---|
| 1 | Refrigerant liquid pipe |
| 2 | Refrigerant gas pipe |
| 3 | Condensate drain |
| 4 | Power supply/communication wiring conduits |
| 5 | Air discharge opening |
| 6 | Air suction grille |
| 7 | Suction rim for booster fan |
| 8 | Corner decoration cover |
| 9 | Drain hose |
| 10 | Fresh air intake knock-out hole |
| 11 | Display window |
| 12 | Infrared receiver |

| Category | Inspection hole | | |
|---|---|---|---|
| | Recessed installation | | Exposed installation |
| | Integrated | Suspended | |
| Square Panel | 1 ea | - | |
| Circle Panel | 2 ea | | |

1. Make sure the spacing between the ceiling and the cassette is no more than 10 mm [3/8"].
2. When the conditions exceed 30 °C and RH 80 % in the ceiling or fresh air inducted into the ceiling, additional insulation is required (polythene foam, thickness 10 mm [3/8"] or more)
3. Open type panel model code: PC4NUNMAN
4. The circular panel is available by default in the exposed installation.
5. Make inspection holes on the ceiling for easier installation and maintenance, as shown in the following table. (An inspection hole must be at least 450 mm x 450 mm in size.)
6. A suspended ceiling structure can substitute for the inspection holes.

# Specifications

## Wind-Free™ 4-Way Cassette

- Two-step cooling: Fast Cooling mode and Wind-Free™ Cooling mode.
- Four-way air supply via independently adjustable blades.
- Built-in condensation drain pump and humidity sensor.
- Direct drive fan powered by a BLDC motor.
- Compatible with Wi-Fi Kit controller.
- Motion Detect Sensor (optional).



| Model Name | | | | AM015NNNDEH/EU | AM022NNNDEH/EU | AM028NNNDEH/EU |
|---|---|---|---|---|---|---|
| Power Supply | | | Φ, #, V, Hz | 1Φ, 2, 220~240 V, 50 Hz | 1Φ, 2, 220~240 V, 50 Hz | 1Φ, 2, 220~240 V, 50 Hz |
| Performance | Capacity | Cooling | kW | 1.5 | 2.2 | 2.8 |
| | | Heating | | 1.7 | 2.5 | 3.2 |
| Power | Power Input | Cooling | W | 18 | 18 | 18 |
| | | Heating | | 18 | 18 | 18 |
| | Current Input | Cooling | A | 0.17 | 0.17 | 0.17 |
| | | Heating | | 0.17 | 0.17 | 0.17 |
| | Current | MCA | A | 0.2 | 0.2 | 0.2 |
| | | MFA | | 15 | 15 | 15 |
| Fan | Type | | - | Turbo Fan | Turbo Fan | Turbo Fan |
| | Number of Fans | | - | 1 | 1 | 1 |
| | Airflow Rate | H/M/L | $m^3$/min | 8.2/7.0/6.3 | 9.0/7.7/6.5 | 10.0/8.5/7.5 |
| | | | l/s | 137/117/105 | 150/128/108 | 167/142/125 |
| Fan Motor | Model | | - | BLDC Motor | BLDC Motor | BLDC Motor |
| | Output x n | | W | 65 x 1 | 65 x 1 | 65 x 1 |
| Piping Connections | Liquid Pipe | | ø, mm | 6.35 | 6.35 | 6.35 |
| | | | ø, inch | 1/4 | 1/4 | 1/4 |
| | Gas Pipe | | ø, mm | 12.7 | 12.7 | 12.7 |
| | | | ø, inch | 1/2 | 1/2 | 1/2 |
| | Drain Pipe | | ø, mm | VP25 (OD 32, ID 25) | VP25 (OD 32, ID 25) | VP25 (OD 32, ID 25) |
| Wiring Connections | Communication | Min. | $mm^2$ | 0.75 | 0.75 | 0.75 |
| | | Remark | - | F1, F2 | F1, F2 | F1, F2 |
| Refrigerant | Type | | - | R410A | R410A | R410A |
| | Electronic Expansion Valve | | - | EEV INCLUDED | EEV INCLUDED | EEV INCLUDED |
| Sound [2] | Sound Pressure | H/M/L | dB(A) | 30.0/28.0/23.0 | 32.0/29.0/25.0 | 33.0/30.0/26.0 |
| | Sound Power | Cooling | | 46 | 47 | 50 |
| Dimensions | Net Weight | | kg | 12.0 | 12.0 | 12.0 |
| | Net Dimensions (W × H × D) | | mm | 575 x 250 x 575 | 575 x 250 x 575 | 575 x 250 x 575 |
| Panel | Model Name | | - | PC4SUFMAN | PC4SUFMAN | PC4SUFMAN |
| Drain Pump | Drain Pump | | - | INCLUDED | INCLUDED | INCLUDED |
| | Max. Lifting Height/Displacement | | mm / litres/h | 750/24 | 750/24 | 750/24 |



| AM036NNNDEH/EU | AM045NNNDEH/EU | AM056NNNDEH/EU | AM060NNNDEH/EU |
|---|---|---|---|
| 1Φ, 2, 220~240 V, 50 Hz | 1Φ, 2, 220~240 V, 50 Hz | 1Φ, 2, 220~240 V, 50 Hz | 1Φ, 2, 220~240 V, 50 Hz |
| 3.6 | 4.5 | 5.6 | 6.0 |
| 4.0 | 5.0 | 6.3 | 6.8 |
| 20 | 23 | 28 | 31 |
| 20 | 23 | 28 | 31 |
| 0.19 | 0.22 | 0.27 | 0.30 |
| 0.19 | 0.22 | 0.27 | 0.30 |
| 0.2 | 0.3 | 0.4 | 0.4 |
| 15 | 15 | 15 | 15 |
| Turbo Fan | Turbo Fan | Turbo Fan | Turbo Fan |
| 1 | 1 | 1 | 1 |
| 10.5/9.5/8.0 | 11.5/10.2/9.0 | 13.0/11.0/9.5 | 13.5/12.0/10.2 |
| 175/158/133 | 192/170/150 | 217/183/158 | 225/200/170 |
| BLDC Motor | BLDC Motor | BLDC Motor | BLDC Motor |
| 65 x 1 | 65 x 1 | 65 x 1 | 65 x 1 |
| 6.35 | 6.35 | 6.35 | 6.35 |
| 1/4 | 1/4 | 1/4 | 1/4 |
| 12.7 | 12.7 | 12.7 | 12.7 |
| 1/2 | 1/2 | 1/2 | 1/2 |
| VP25 (OD 32, ID 25) | VP25 (OD 32, ID 25) | VP25 (OD 32, ID 25) | VP25 (OD 32, ID 25) |
| 0.75 | 0.75 | 0.75 | 0.75 |
| F1, F2 | F1, F2 | F1, F2 | F1, F2 |
| R410A | R410A | R410A | R410A |
| EEV INCLUDED | EEV INCLUDED | EEV INCLUDED | EEV INCLUDED |
| 34.0/30.0/26.0 | 36.0/34.0/32.0 | 39.0/36.0/33.0 | 40.0/38.0/35.0 |
| 51 | 53 | 56 | 57 |
| 12.0 | 12.0 | 12.0 | 12.0 |
| 575 x 250 x 575 | 575 x 250 x 575 | 575 x 250 x 575 | 575 x 250 x 575 |
| PC4SUFMAN | PC4SUFMAN | PC4SUFMAN | PC4SUFMAN |
| INCLUDED | INCLUDED | INCLUDED | INCLUDED |
| 750/24 | 750/24 | 750/24 | 750/24 |

### Accessories



| Wireless Remote Controller | Simple Type Controller | Touch Controller | Wired Remote Controller | Wired Remote Controller | Wi-Fi Kit | Panel (Required) |
|---|---|---|---|---|---|---|
| AR-EH03E | MWR-SH00N | MWR-SH11N | MWR-WG00*N | MWR-WE13N | MIM-H04EN | PC4SUFMAN |





VRF

# Specifications

## Wind-Free™ 4-Way Cassette

- Two-step cooling: Fast Cooling mode and Wind-Free™ Cooling mode.
- Four-way air supply via independently adjustable blades.
- Built-in condensation drain pump and humidity sensor.
- Direct drive fan powered by a BLDC motor.
- Compatible with Wi-Fi Kit controller.
- Motion Detect Sensor (optional).



| Model Name | | | | AM045NN4DEH/EU | AM056NN4DEH/EU | AM071NN4DEH/EU |
|---|---|---|---|---|---|---|
| Power Supply | | | Φ, #, V, Hz | 1Φ, 2, 220~240 V, 50 Hz | 1Φ, 2, 220~240 V, 50 Hz | 1Φ, 2, 220~240 V, 50 Hz |
| Mode | | | - | HP/HR | HP/HR | HP/HR |
| Performance | Capacity | Cooling | kW | 4.5 | 5.6 | 7.1 |
| | | Heating | | 5.0 | 6.3 | 8.0 |
| Power | Power Input | Cooling | W | 32 | 32 | 45 |
| | | Heating | | 32 | 32 | 45 |
| | Current Input | Cooling | A | 0.22 | 0.22 | 0.31 |
| | | Heating | | 0.22 | 0.22 | 0.31 |
| | Current | MCA | A | 0.3 | 0.3 | 0.4 |
| | | MFA | | 15 | 15 | 15 |
| Fan | Type | | - | Turbo Fan | Turbo Fan | Turbo Fan |
| | Number of Fans | | - | 1 | 1 | 1 |
| | Airflow Rate H/M/L | | $m^3$/min | 14.5/13.5/12.5 | 15.0/14.0/13.0 | 17.0/15.5/14.5 |
| | | | l/s | 242/225/208 | 250/233/217 | 283/258/242 |
| Fan Motor | Model | | - | BLDC Motor | BLDC Motor | BLDC Motor |
| | Output x n | | W | 65 x 1 | 65 x 1 | 65 x 1 |
| Piping Connections | Liquid Pipe | | ø, mm | 6.35 | 6.35 | 9.52 |
| | | | ø, inch | 1/4 | 1/4 | 3/8 |
| | Gas Pipe | | ø, mm | 12.7 | 12.7 | 15.88 |
| | | | ø, inch | 1/2 | 1/2 | 5/8 |
| | Drain Pipe | | ø, mm | VP25 (OD 32, ID 25) | VP25 (OD 32, ID 25) | VP25 (OD 32, ID 25) |
| Wiring Connections | Communication | Minimum | $mm^2$ | 0.75 | 0.75 | 0.75 |
| | | Remark | - | F1, F2 | F1, F2 | F1, F2 |
| Refrigerant | Type | | - | R410A | R410A | R410A |
| | Electronic Expansion Valve | | - | EEV INCLUDED | EEV INCLUDED | EEV INCLUDED |
| Sound [2] | Sound Pressure | H/M/L | dB(A) | 33.0/32.0/30.0 | 33.0/32.0/30.0 | 35.0/34.0/33.0 |
| | Sound Power | Cooling | | 49 | 50 | 54 |
| Dimensions | Net Weight | | kg | 15.5 | 15.5 | 15.5 |
| | Net Dimensions (W × H × D) | | mm | 840 x 204 x 840 | 840 x 204 x 840 | 840 x 204 x 840 |
| Panel | Model Name | | - | PC4NUFMAN | PC4NUFMAN | PC4NUFMAN |
| Drain Pump | Drain Pump | | - | INCLUDED | INCLUDED | INCLUDED |
| | Max. Lifting Height/Displacement | | mm / litres/h | 750/24 | 750/24 | 750/24 |



| AM090NN4DEH/EU | AM112NN4DEH/EU | AM128NN4DEH/EU | AM140NN4DEH/EU |
|---|---|---|---|
| 1Φ, 2, 220~240 V, 50 Hz | 1Φ, 2, 220~240 V, 50 Hz | 1Φ, 2, 220~240 V, 50 Hz | 1Φ, 2, 220~240 V, 50 Hz |
| HP/HR | HP/HR | HP/HR | HP/HR |
| 9.0 | 11.2 | 12.8 | 14.0 |
| 10.0 | 12.5 | 13.8 | 16.0 |
| 62 | 78 | 73 | 89 |
| 62 | 78 | 73 | 89 |
| 0.43 | 0.55 | 0.51 | 0.62 |
| 0.43 | 0.55 | 0.51 | 0.62 |
| 0.6 | 0.9 | 0.8 | 0.9 |
| 15 | 15 | 15 | 15 |
| Turbo Fan | Turbo Fan | Turbo Fan | Turbo Fan |
| 1 | 1 | 1 | 1 |
| 19.5/18.0/16.5 | 26.0/24.0/22.0 | 28.0/26.0/23.0 | 30.0/28.0/26.0 |
| 325/300/275 | 433/400/367 | 467/433/383 | 500/467/433 |
| BLDC Motor | BLDC Motor | BLDC Motor | BLDC Motor |
| 65 x 1 | 65 x 1 | 97 x 1 | 97 x 1 |
| 9.52 | 9.52 | 9.52 | 9.52 |
| 3/8 | 3/8 | 3/8 | 3/8 |
| 15.88 | 15.88 | 15.88 | 15.88 |
| 5/8 | 5/8 | 5/8 | 5/8 |
| VP25 (OD 32, ID 25) | VP25 (OD 32, ID 25) | VP25 (OD 32, ID 25) | VP25 (OD 32, ID 25) |
| 0.75 | 0.75 | 0.75 | 0.75 |
| F1, F2 | F1, F2 | F1, F2 | F1, F2 |
| R410A | R410A | R410A | R410A |
| EEV INCLUDED | EEV INCLUDED | EEV INCLUDED | EEV INCLUDED |
| 39.0/36.0/33.0 | 40.0/38.0/35.0 | 42.0/40.0/35.0 | 44.0/41.0/35.0 |
| 57 | 57 | 58 | 60 |
| 15.5 | 17.0 | 19.0 | 19.0 |
| 840 x 204 x 840 | 840 x 246 x 840 | 840 x 288 x 840 | 840 x 288 x 840 |
| PC4NUFMAN | PC4NUFMAN | PC4NUFMAN | PC4NUFMAN |
| INCLUDED | INCLUDED | INCLUDED | INCLUDED |
| 750/24 | 750/24 | 750/24 | 750/24 |

### Accessories



Wireless Remote Controller
AR-EH03E



Simple Type Controller
MWR-SH00N



Touch Controller
MWR-SH11N



Wired Remote Controller
MWR-WG00*N



Wired Remote Controller
MWR-WE13N



Wi-Fi Kit
MIM-H04EN



External Thermostat
MRW-TA



Panel (Mandatory)
PC4NUFMAN



VRF

# Technical Drawings

## Wind-Free™ 4-Way Cassette

**AM***NNNDEH/EU**

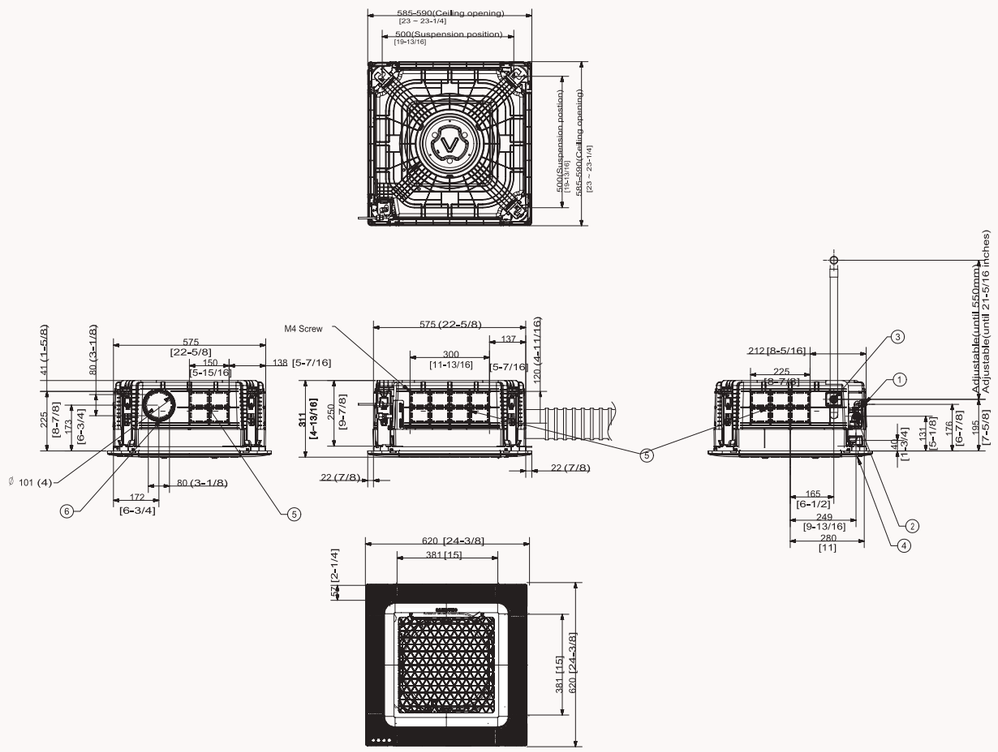


| NO | Name | Description |
|---|---|---|
| 1 | Liquid pipe connection | ø6.35 (1/4) |
| 2 | Gas pipe connection | ø12.70 (1/2) |
| 3 | Drain pipe connection | VP25 (OD 32, ID 25) |
| 4 | Power supply/communication wiring conduits | Use M4 Screw |
| 5 | Fresh air intake knock-out hole | ø10 [4], use M4 Screw |

Note: As for suspension bolt, please use M8~M10. (Procured at local site)

# Technical Drawings

## Wind-Free™ 4-Way Cassette

**AM045/056/071/090NN4DEH/EU**

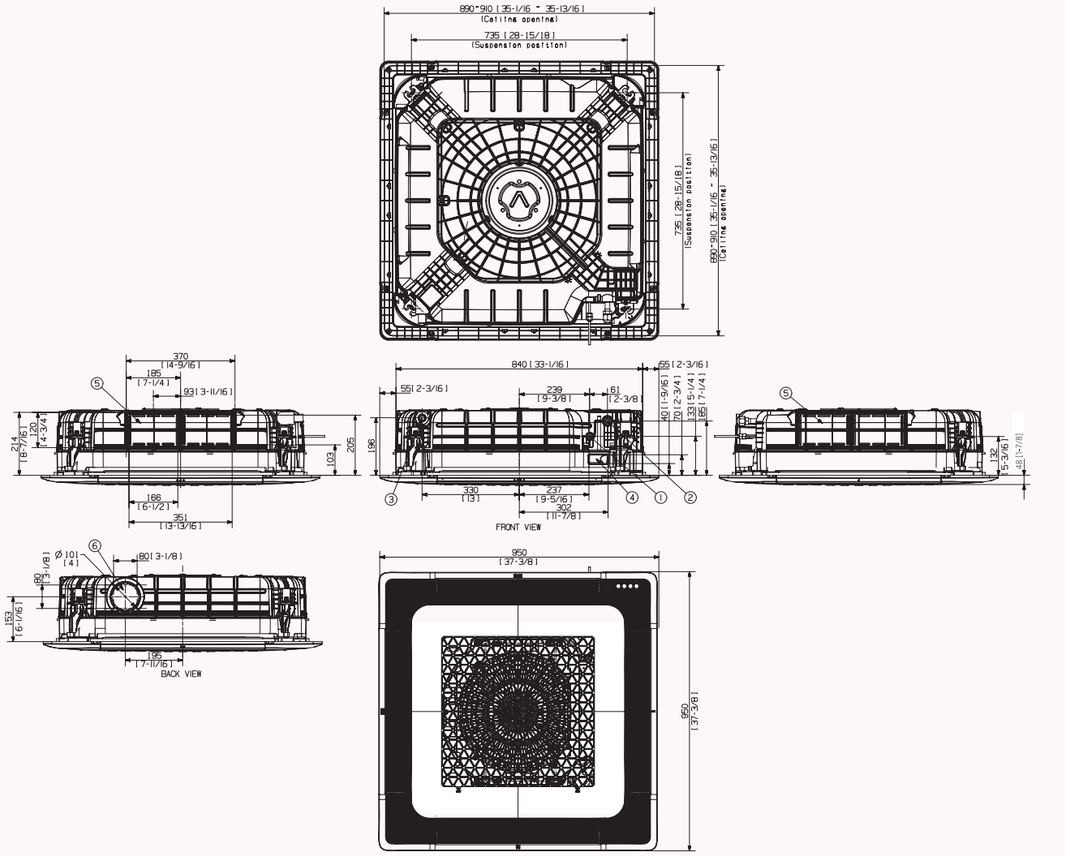


| NO | Name | Description | | | |
|---|---|---|---|---|---|
| | | 4.5 kW | 5.6 kW | 7.1 kW | 9.0 kW |
| 1 | Liquid pipe connection | ø6.35 (1/4) | | ø9.52 (3/8) | |
| 2 | Gas pipe connection | ø12.7 (1/2) | | ø15.88 (5/8) | |
| 3 | Drain pipe connection | VP25 (OD 32, ID 25) | | | |
| 4 | Power supply/communication wiring conduits | | | | |
| 5 | Fresh air intake knock-out hole | ø10 [4], use M4 Screw | | | |

Note: As for suspension bolt, please use M8~M10. (Procured at local site)





**AM112NN4DEH/EU**

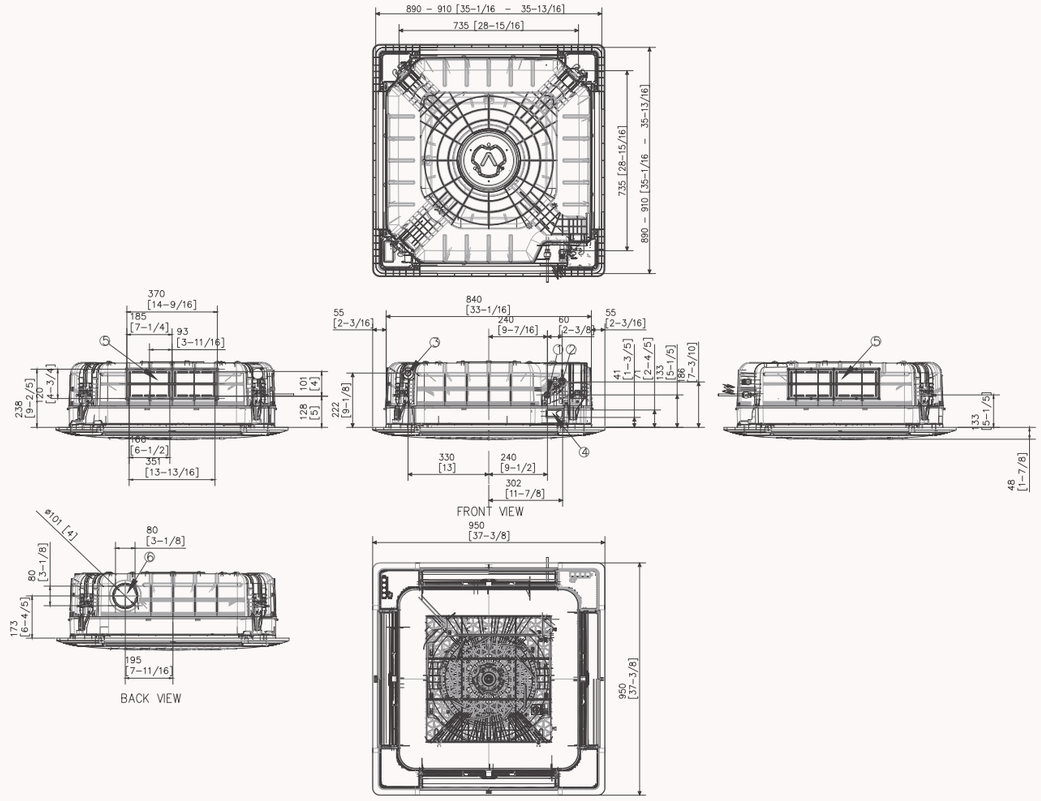


| NO | Name | Description |
|---|---|---|
| 1 | Liquid pipe connection | ø9.52 (3/8) |
| 2 | Gas pipe connection | ø15.88 (5/8) |
| 3 | Drain pipe connection | VP25 (OD 32, ID 25) |
| 4 | Power supply/communication wiring conduits | |
| 5 | Fresh air intake knock-out hole | ø10 [4], use M4 Screw |

Note: As for suspension bolt, please use M8~M10. (Procured at local site)

# Technical Drawings

## Wind-Free™ 4-Way Cassette

**AM128/140NN4DEH/EU**

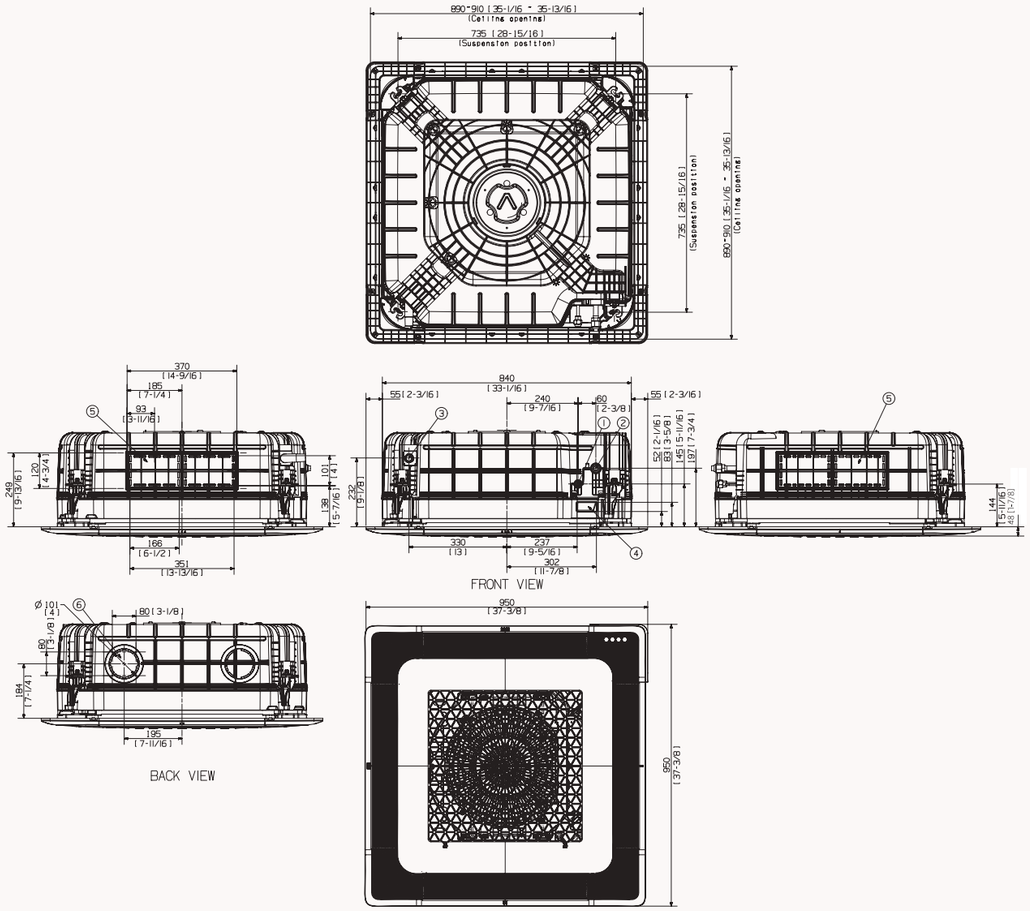


| NO | Name | Description |
|---|---|---|
| 1 | Liquid pipe connection | ø9.52 (3/8) |
| 2 | Gas pipe connection | ø15.88 (5/8) |
| 3 | Drain pipe connection | VP25 (OD 32, ID 25) |
| 4 | Power supply/communication wiring conduits | |
| 5 | Fresh air intake knock-out hole | ø10 [4], use M4 Screw |

Note: As for suspension bolt, please use M8~M10. (Procured at local site)





VRF

# Specifications

## Wind-Free™ 1-Way Cassette

- Two-step cooling: Fast Cooling mode and Wind-Free™ Cooling mode.
- One-way air supply by means of a 100 mm wide blade.
- Built-in condensation drain pump and humidity sensor.
- Cross-flow fan direct driven by a BLDC motor.
- Compatible with Wi-Fi Kit controller.



| Model | | | | AM017NN1PEH/EU | AM022NN1PEH/EU | AM022NN1DEH/EU |
|---|---|---|---|---|---|---|
| Power Supply | | | Φ, #, V, Hz | 1Φ, 2, 220~240 V, 50 Hz | 1Φ, 2, 220~240 V, 50 Hz | 1Φ, 2, 220~240 V, 50 Hz |
| Performance | Capacity | Cooling | kW | 1.7 | 2.2 | 2.2 |
| | | Heating | | 1.9 | 2.5 | 2.5 |
| Power | Power Input | Cooling | W | 24 | 25 | 40 |
| | | Heating | | 24 | 25 | 40 |
| | Current Input | Cooling | A | 0.14 | 0.15 | 0.20 |
| | | Heating | | 0.14 | 0.15 | 0.20 |
| | Current | MCA | A | 0.18 | 0.19 | 0.25 |
| | | MFA | | 15 | 15 | 15 |
| Fan | Type | | - | Crossflow Fan | Crossflow Fan | Crossflow Fan |
| | Number of Fans | | - | 1 | 1 | 1 |
| | Airflow Rate | H/M/L | $m^3$/min | 4.80/4.30/4.10 | 5.10/4.60/4.30 | 6.00/5.00/4.00 |
| | | | l/s | 80.00/71.67/68.33 | 85.00/76.67/71.67 | 100.00/83.33/66.67 |
| Fan Motor | Model | | - | BLDC Motor | BLDC Motor | AC Motor |
| | Output x n | | W | 27 x 1 | 27 x 1 | 17 x 1 |
| Piping Connections | Liquid Pipe | | ø, mm | 6.35 | 6.35 | 6.35 |
| | | | ø, inch | 1/4 | 1/4 | 1/4 |
| | Gas Pipe | | ø, mm | 12.7 | 12.7 | 12.7 |
| | | | ø, inch | 1/2 | 1/2 | 1/2 |
| | Drain Pipe | | ø, mm | VP20 (OD 25, ID 20) | VP20 (OD 25, ID 20) | VP20 (OD 25, ID 20) |
| Wiring Connections | Connection with Indoor | Minimum | $mm^2$ | 0.75 | 0.75 | 0.75 |
| | | Remark | - | F1, F2 | F1, F2 | F1, F2 |
| Refrigerant | Type | | - | R410A | R410A | R410A |
| | Electronic Expansion Valve | | - | EEV INCLUDED | EEV INCLUDED | EEV INCLUDED |
| Sound [2] | Sound Pressure | (H/M/L) | dB(A) | 28/26/24 | 29/26/24 | 29/26/24 |
| | Sound Power | Cooling | | 46 | 47 | 47 |
| Dimension | Net Weight | | kg | 8.0 | 8.0 | 10.0 |
| | Net Dimensions (W x H x D) | | mm | 740 x 135 x 360 | 740 x 135 x 360 | 970 x 135 x 410 |
| Panel | Model Name | | - | PC1MWFMAN | PC1MWFMAN | PC1NWFMAN |
| Drain pump | | | - | INCLUDED | INCLUDED | INCLUDED |
| | Max. Lifting Height/Displacement | | mm / litres/h | 750/24 | 750/24 | 750/24 |



| AM028NN1DEH/EU | AM036NN1DEH/EU | AM056NN1DEH/EU | AM071NN1DEH/EU |
|---|---|---|---|
| 1Φ, 2, 220~240 V, 50 Hz | 1Φ, 2, 220~240 V, 50 Hz | 1Φ, 2, 220~240 V, 50 Hz | 1Φ, 2, 220~240 V, 50 Hz |
| 2.8 | 3.6 | 5.6 | 7.1 |
| 3.2 | 4.0 | 6.3 | 8.0 |
| 45 | 50 | 55 | 80 |
| 45 | 50 | 55 | 80 |
| 0.23 | 0.25 | 0.28 | 0.4 |
| 0.23 | 0.25 | 0.28 | 0.4 |
| 0.29 | 0.31 | 0.35 | 0.50 |
| 15 | 15 | 15 | 15 |
| Crossflow Fan | Crossflow Fan | Crossflow Fan | Crossflow Fan |
| 1 | 1 | 1 | 1 |
| 7.00/6.00/5.00 | 8.00/7.00/6.00 | 16.00/14.00/12.50 | 17.00/15.50/14.00 |
| 116.67/100.00/83.33 | 133.33/116.67/100.00 | 266.67/233.33/208.33 | 283.33/258.33/233.33 |
| AC Motor | AC Motor | BLDC Motor | BLDC Motor |
| 17 x 1 | 17 x 1 | 54 x 1 | 54 x 1 |
| 6.35 | 6.35 | 6.35 | 9.52 |
| 1/4 | 1/4 | 1/4 | 3/8 |
| 12.7 | 12.7 | 12.7 | 15.88 |
| 1/2 | 1/2 | 1/2 | 5/8 |
| VP20 (OD 25, ID 20) | VP20 (OD 25, ID 20) | VP20 (OD 25, ID 20) | VP20 (OD 25, ID 20) |
| 0.75 | 0.75 | 0.75 | 0.75 |
| F1, F2 | F1, F2 | F1, F2 | F1, F2 |
| R410A | R410A | R410A | R410A |
| EEV INCLUDED | EEV INCLUDED | EEV INCLUDED | EEV INCLUDED |
| 32/28/24 | 37/33/30 | 41/38/35 | 42/39/36 |
| 50 | 55 | 59 | 60 |
| 10.0 | 10.0 | 13.5 | 13.5 |
| 970 x 135 x 410 | 970 x 135 x 410 | 1,200 x 138 x 450 | 1,200 x 138 x 450 |
| PC1NWFMAN | PC1NWFMAN | PC1BWFMAN | PC1BWFMAN |
| INCLUDED | INCLUDED | INCLUDED | INCLUDED |
| 750/24 | 750/24 | 750/24 | 750/24 |

### Accessories



Wireless Remote Controller
AR-EH03E



Simple Type Controller
MWR-SH00N



Touch Controller
MWR-SH11N



Wired Remote Controller
MWR-WG00*N



Wired Remote Controller
MWR-WE13N



Wi-Fi Kit
MIM-H04EN



Panel
PC1*WFMAN



External Thermostat
MRW-TA



VRF

# Dimensional drawings

## Wind-Free™ 1-Way Cassette

**AM017/022NN1PEH/**AM017/022NN1PEH/****

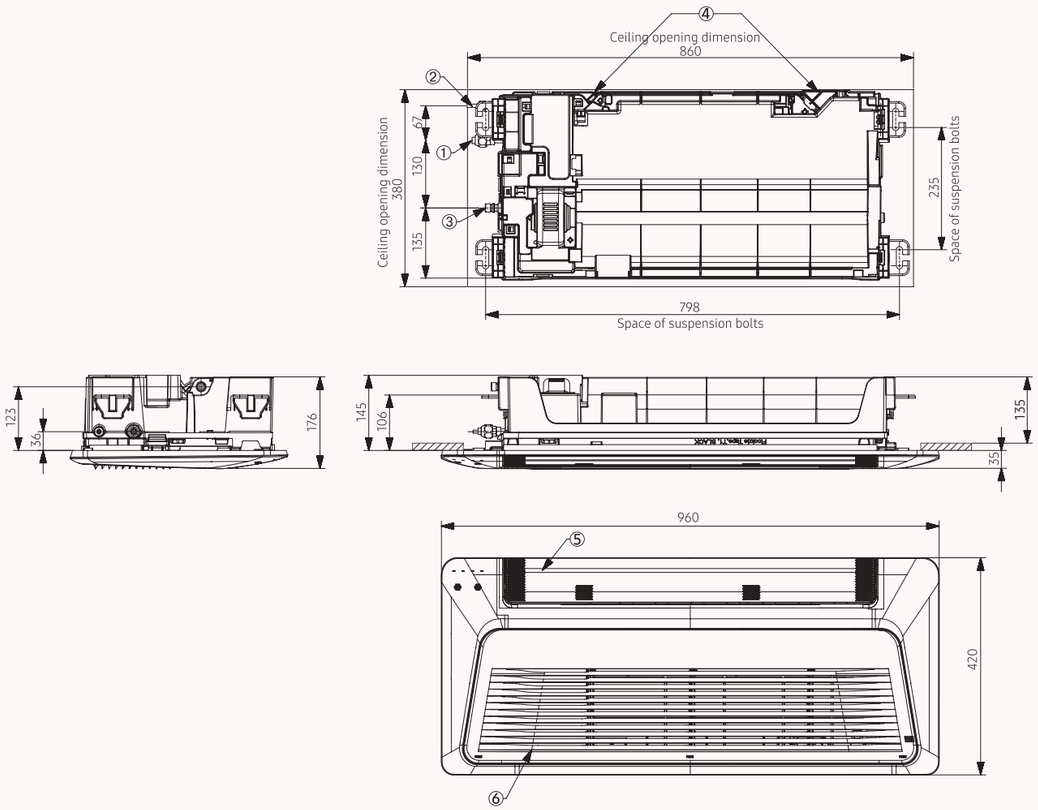


| NO | Name | Description |
|---|---|---|
| 1 | Liquid pipe connection | ø9.52 (3/8) |
| 2 | Gas pipe connection | ø6.35 (1/4) |
| 3 | Drain pipe connection | VP20 (OD 26, ID 20) |
| 4 | Power supply/communication wiring conduits | |
| 5 | Fresh air intake knock-out hole | |

**AM022/028/036NN1DEH/**

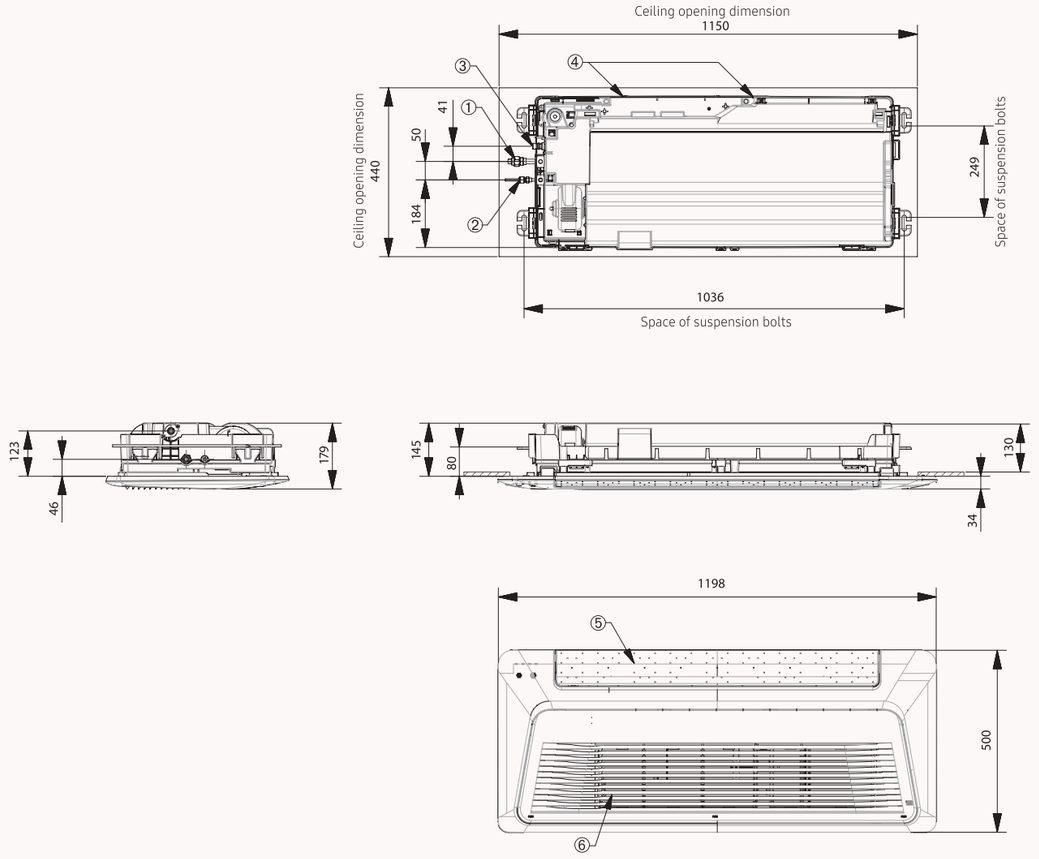


| NO | Name | Description |
|---|---|---|
| 1 | Liquid pipe connection | ø12.70 (1/2) |
| 2 | Gas pipe connection | ø6.35 (1/4) |
| 3 | Drain pipe connection | VP20 (OD 26, ID 20) |
| 4 | Power supply/communication wiring conduits | |
| 5 | Fresh air intake knock-out hole | |

# Dimensional drawings

## Wind-Free™ 1-Way Cassette

**AM056/071NN1DEH/**

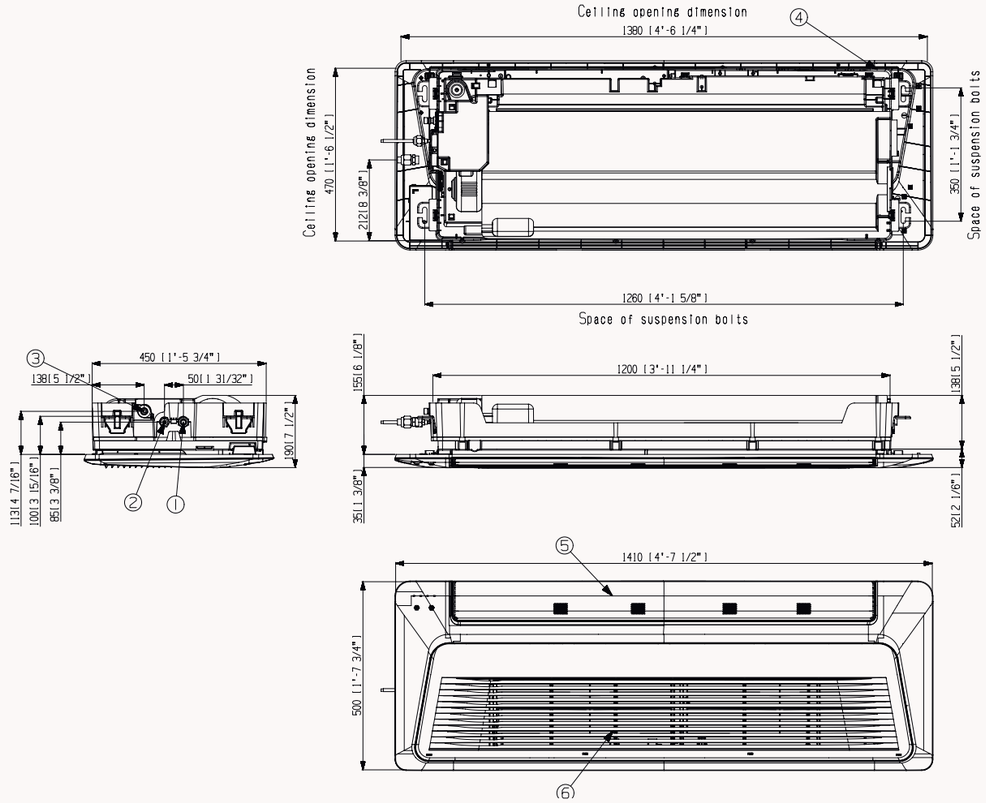


| NO | Name | Description | |
|---|---|---|---|
| | | **5.2 kW** | **7.1 kW** |
| 1 | Gas pipe connection | ø12.70 (1/2) | ø15.88 (5/8) |
| 2 | Liquid pipe connection | ø6.35 (1/4) | ø9.52 (3/8) |
| 3 | Drain hose connection | V25 (OD 32, ID 25) | |
| 4 | Power supply/communication wiring conduits | | |
| 5 | Air outlet louvre | | |
| 6 | Air inlet grille | | |

VRF

# Specifications

## Duct S

- Two-position field adjustable air return, on the bottom or at the rear of the unit.
- Equipped with one Sirocco fan direct driven by a single motor.
- Long-life washable permanent filter is included.
- Auto Restart function.
- Optional condensate drain pump.



| Model | | | | AM036HNMPKH/EU | AM045HNMPKH/EU | AM056HNMPKH/EU | AM071HNMPKH/EU |
|---|---|---|---|---|---|---|---|
| Power Supply | | | Φ, #, V, Hz | 1Φ, 2, 220~240 V, 50 Hz | 1Φ, 2, 220~240 V, 50 Hz | 1Φ, 2, 220~240 V, 50 Hz | 1Φ, 2, 220~240 V, 50 Hz |
| Performance | Capacity (Nominal) | Cooling | kW | 3.6 | 4.5 | 5.6 | 7.1 |
| | | Heating | kW | 4.0 | 5.0 | 6.3 | 8.0 |
| Power | Power Input (Nominal) | Cooling | W | 50 | 60 | 70 | 120 |
| | | Heating | W | 50 | 60 | 70 | 120 |
| | Current Input (Nominal) | Cooling | A | 0.5 | 0.6 | 0.7 | 1.0 |
| | | Heating | A | 0.5 | 0.6 | 0.7 | 1.0 |
| | Current | MCA | A | 1.04 | 1.26 | 1.26 | 1.52 |
| | | MFA/MOP | A | 15 | 15 | 15 | 15 |
| Fan | Type | | - | Sirocco Fan | Sirocco Fan | Sirocco Fan | Sirocco Fan |
| | Number of Fans | | - | 2 | 2 | 2 | 2 |
| | Airflow Rate | H/M/L (UL) | $m^3$/min | 12.0/9.5/8.0 | 14.0/11.0/8.0 | 16.0/13.5/11.0 | 22.0/19.0/16.0 |
| | | | l/s | 200/158/133 | 233/183/133 | 267/225/183 | 367/317/267 |
| | External Pressure | Min/Std/Max | mmAq | 0.00/2.50/15.00 | 0.00/3.00/15.00 | 0.00/3.00/15.00 | 0.00/3.00/15.00 |
| | | | Pa | 0.00/24.50/147.20 | 0.00/29.40/147.20 | 0.00/29.40/147.20 | 0.00/29.40/147.20 |
| Fan Motor | Model | | - | BLDC motor (feedback) | BLDC motor (feedback) | BLDC motor (feedback) | BLDC motor (feedback) |
| | Output x n | | W | 153 x 1 | 153 x 1 | 153 x 1 | 153 x 1 |
| Piping Connections | Liquid Pipe | | ø, mm | 6.35 | 6.35 | 6.35 | 9.52 |
| | | | ø, inch | 1/4 | 1/4 | 1/4 | 3/8 |
| | Gas Pipe | | ø, mm | 12.7 | 12.7 | 12.7 | 15.88 |
| | | | ø, inch | 1/2 | 1/2 | 1/2 | 5/8 |
| | Drain Pipe | | ø, mm | VP25 (OD 32, ID 25) | VP25 (OD 32, ID 25) | VP25 (OD 32, ID 25) | VP25 (OD 32, ID 25) |
| Wiring Connections | For power supply | Minimum | mm² | 1.5 | 1.5 | 1.5 | 1.5 |
| | Connection with Indoor | Minimum | mm² | 0.75 | 0.75 | 0.75 | 0.75 |
| | | Remark | - | F1, F2 | F1, F2 | F1, F2 | F1, F2 |
| Refrigerant | Type | | - | R410A | R410A | R410A | R410A |
| | Control Method | | - | EEV Included | EEV Included | EEV Included | EEV Included |
| Sound [2] | Sound Pressure | (H/M/L) | dB(A) | 29/26/23 | 31/28/24 | 32/29/25 | 37/33/29 |
| | Sound Power | Cooling (Nominal) | dB(A) | 40 | 44 | 45 | 47 |
| Dimensions | Net Weight | | kg | 25.5 | 25.5 | 25.5 | 25.5 |
| | Net Dimensions (W × H × D) | | mm | 850 x 250 x 700 | 850 x 250 x 700 | 850 x 250 x 700 | 850 x 250 x 700 |
| Air Filter | Type | | - | Removable/Washable/ Mildew-proof | Removable/Washable/ Mildew-proof | Removable/Washable/ Mildew-proof | Removable/Washable/ Mildew-proof |
| Additional Accessories | Drain Pump | Drain Pump | Model | MDP-G075SQ (built-in) MDP-G075SP (external) | MDP-G075SQ (built-in) MDP-G075SP (external) | MDP-G075SQ (built-in) MDP-G075SP (external) | MDP-G075SQ (built-in) MDP-G075SP (external) |
| | | Max. Lifting Height | mm | 750 | 750 | 750 | 750 |



| AM090HNMPKH/EU | AM112HNMPKH/EU | AM112HNHPKH/EU | AM128HNMPKH/EU | AM128HNHPKH/EU | AM140HNMPKH/EU | AM140HNHPKH/EU |
|---|---|---|---|---|---|---|
| 1Φ, 2, 220~240 V, 50 Hz | 1Φ, 2, 220~240 V, 50 Hz | 1Φ, 2, 220~240 V, 50 Hz | 1Φ, 2, 220~240 V, 50 Hz | 1Φ, 2, 220~240 V, 50 Hz | 1Φ, 2, 220~240 V, 50 Hz | 1Φ, 2, 220~240 V, 50 Hz |
| 9.0 | 11.2 | 11.2 | 12.8 | 12.8 | 14.0 | 14.0 |
| 10.0 | 12.5 | 12.5 | 13.8 | 13.8 | 16.0 | 16.0 |
| 145 | 165 | 205 | 175 | 230 | 215 | 260 |
| 145 | 165 | 205 | 175 | 230 | 215 | 260 |
| 1.2 | 1.4 | 205 | 1.5 | 1.4 | 1.7 | 1.5 |
| 1.2 | 1.4 | 1.2 | 1.5 | 1.4 | 1.7 | 1.5 |
| 2.03 | 2.51 | 2.92 | 2.51 | 3.17 | 2.51 | 3.42 |
| 15 | 15 | 15 | 15 | 15 | 15 | 15 |
| Sirocco Fan | Sirocco Fan | Sirocco Fan | Sirocco Fan | Sirocco Fan | Sirocco Fan | Sirocco Fan |
| 3 | 3 | 3 | 3 | 3 | 3 | 3 |
| 29.0/25.0/22.0 | 35.0/29.0/22.0 | 35.0/29.0/22.0 | 38.0/32.0/25.0 | 38.0/32.0/25.0 | 42.0/34.0/25.0 | 42.0/34.0/25.0 |
| 483/417/367 | 583/483/367 | 583/483/367 | 633/533/417 | 633/533/417 | 700/567/417 | 700/567/417 |
| 0.00/4.00/15.00 | 0.00/5.20/15.00 | 3.00/6.20/20.00 | 0.00/5.20/15.00 | 3.00/6.20/20.00 | 0.00/5.20/15.00 | 3.00/6.20/20.00 |
| 0.00/39.20/147.20 | 0.00/51.00/147.20 | 0.00/60.80/196.20 | 0.00/51.00/147.20 | 0.00/60.80/196.20 | 0.00/51.00/147.20 | 0.00/60.80/196.20 |
| BLDC motor (feedback) | BLDC motor (feedback) | BLDC motor (feedback) | BLDC motor (feedback) | BLDC motor (feedback) | BLDC motor (feedback) | BLDC motor (feedback) |
| 153 x 1 | 244 x 1 | 350 x 1 | 244 x 1 | 350 x 1 | 244 x 1 | 350 x 1 |
| 9.52 | 9.52 | 9.52 | 9.52 | 9.52 | 9.52 | 9.52 |
| 3/8 | 3/8 | 3/8 | 3/8 | 3/8 | 3/8 | 3/8 |
| 15.88 | 15.88 | 15.88 | 15.88 | 15.88 | 15.88 | 15.88 |
| 5/8 | 5/8 | 5/8 | 5/8 | 5/8 | 5/8 | 5/8 |
| VP25 (OD 32, ID 25) | VP25 (OD 32, ID 25) | VP25 (OD 32, ID 25) | VP25 (OD 32, ID 25) | VP25 (OD 32, ID 25) | VP25 (OD 32, ID 25) | VP25 (OD 32, ID 25) |
| 1.5 | 1.5 | 1.5 | 1.5 | 1.5 | 1.5 | 1.5 |
| 0.75 | 0.75 | 0.75 | 0.75 | 0.75 | 0.75 | 0.75 |
| F1, F2 | F1, F2 | F1, F2 | F1, F2 | F1, F2 | F1, F2 | F1, F2 |
| R410A | R410A | R410A | R410A | R410A | R410A | R410A |
| EEV Included | EEV Included | EEV Included | EEV Included | EEV Included | EEV Included | EEV Included |
| 38/35/32 | 38/35/32 | 38/35/32 | 39/36/33 | 39/36/33 | 40/37/33 | 40/37/34 |
| 44 | 45 | 46 | 46 | 47 | 47 | 49 |
| 33.0 | 38.0 | 46.5 | 38.0 | 46.5 | 38.0 | 46.5 |
| 1,200 x 250 x 700 | 1,300 x 300 x 700 | 1,300 x 300 x 700 | 1,300 x 300 x 700 | 1,300 x 300 x 700 | 1,300 x 300 x 700 | 1,300 x 300 x 700 |
| Removable/Washable/ Mildew-proof | Removable/Washable/ Mildew-proof | Removable/Washable/ Mildew-proof | Removable/Washable/ Mildew-proof | Removable/Washable/ Mildew-proof | Removable/Washable/ Mildew-proof | Removable/Washable/ Mildew-proof |
| MDP-G075SQ (built-in) MDP-G075SP (external) | MDP-G075SQ (built-in) MDP-G075SP (external) | MDP-G075SQ (built-in) MDP-G075SP (external) | MDP-G075SQ (built-in) MDP-G075SP (external) | MDP-G075SQ (built-in) MDP-G075SP (external) | MDP-G075SQ (built-in) MDP-G075SP (external) | MDP-G075SQ (built-in) MDP-G075SP (external) |
| 750 | 750 | 750 | 750 | 750 | 750 | 750 |

### Accessories



| External Drain Pump | Built-in Drain Pump | Wireless Remote Controller | Touch Controller | Wired Remote Controller | Wired Remote Controller | Wi-Fi Kit | Wireless Receiver Kit | External Thermostat |
|---|---|---|---|---|---|---|---|---|
| MDP-G075SP | MDP-G075SQ | AR-EH03E (to be matched with MRK-A10N) | MWR-SH11N | MWR-WE13N | MWR-WG00*N | MIM-H04EN | MRK-A10N (to be matched with AR-EH03E) | MRW-TA |

# Technical Drawings

## Duct S

### AM036HNMPKH/EU, AM045HNMPKH/EU, AM056HNMPKH/EU, AM071HNMPKH/EU

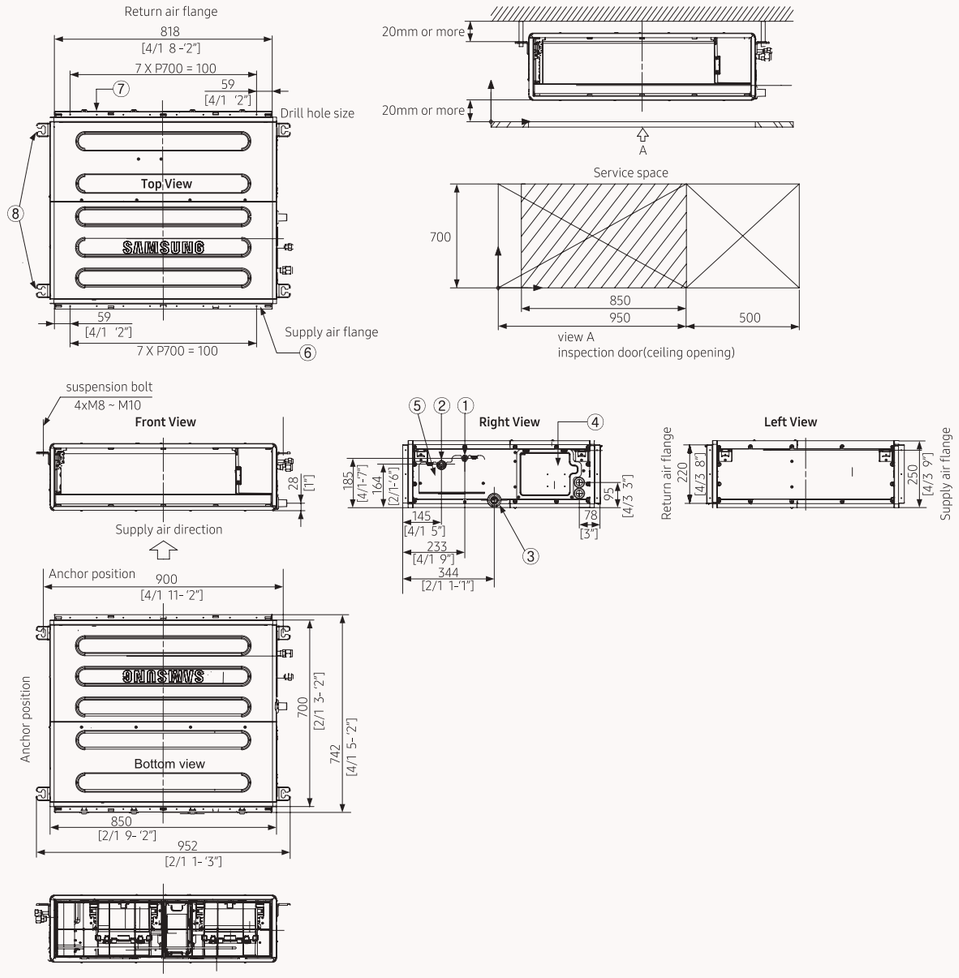


| NO | Name | Description |
|---|---|---|
| 1 | Refrigerant liquid pipe | ø6.35 [1/4] Flare |
| 2 | Refrigerant gas pipe | ø12.70 [1/2] Flare |
| 3 | Condensate drain | VP25 (OD 32, ID 25) |
| 4 | Power supply/communication wiring conduits | |
| 5 | Refrigerant pipe conduits | |
| 6 | Supply air flange | |
| 7 | Return air flange | |
| 8 | Hook | |

### AM090HNMPKH/EU

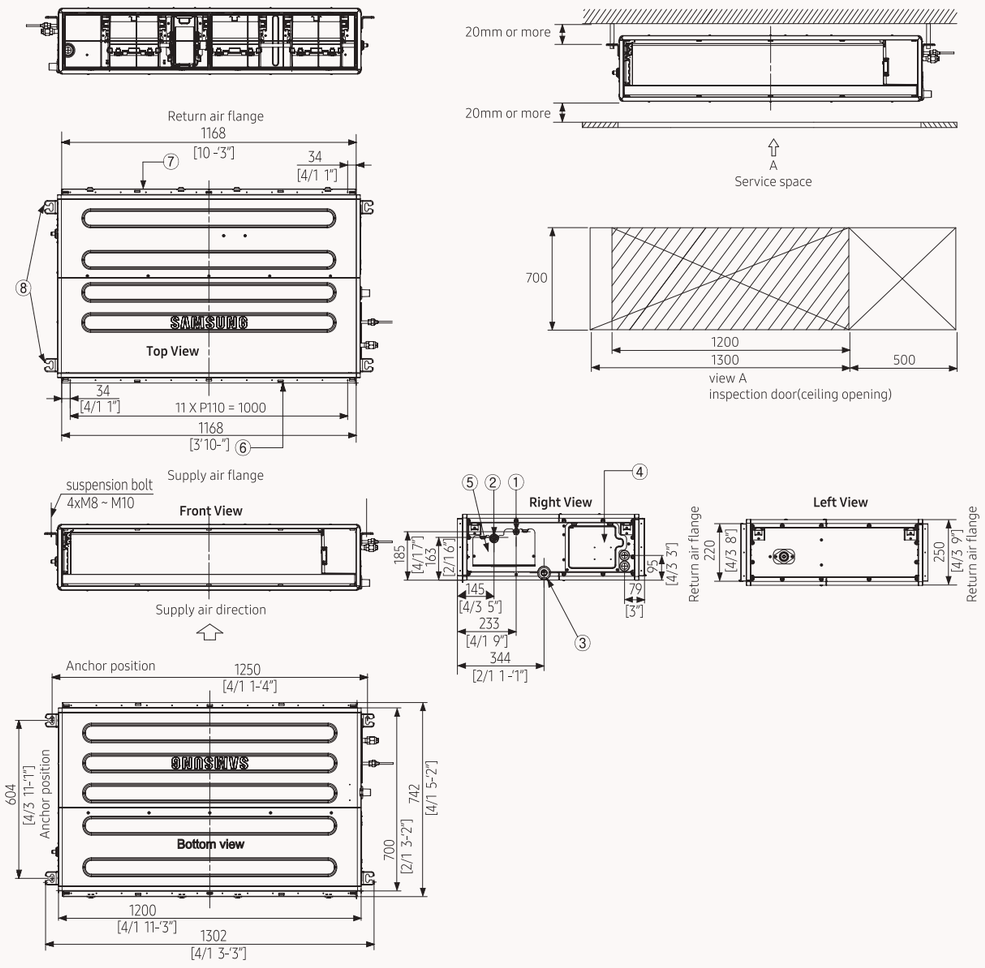


| NO | Name | Description |
|---|---|---|
| 1 | Refrigerant liquid pipe | ø9.52 [3/8] Flare connection |
| 2 | Refrigerant gas pipe | ø15.88 [5/8] Flare connection |
| 3 | Condensate drain | VP25 (OD 32, ID 25) |
| 4 | Power supply/communication wiring conduits | |
| 5 | Refrigerant pipe conduits | |
| 6 | Supply air flange | |
| 7 | Return air flange | |
| 8 | Hook | |

# Technical Drawings

## Duct S

**AM112HNMPKH/EU, AM128HNMPKH/EU, AM140HNMPKH/EU, AM112HNHPKH/EU, AM128HNHPKH/EU, AM140HNHPKH/EU**

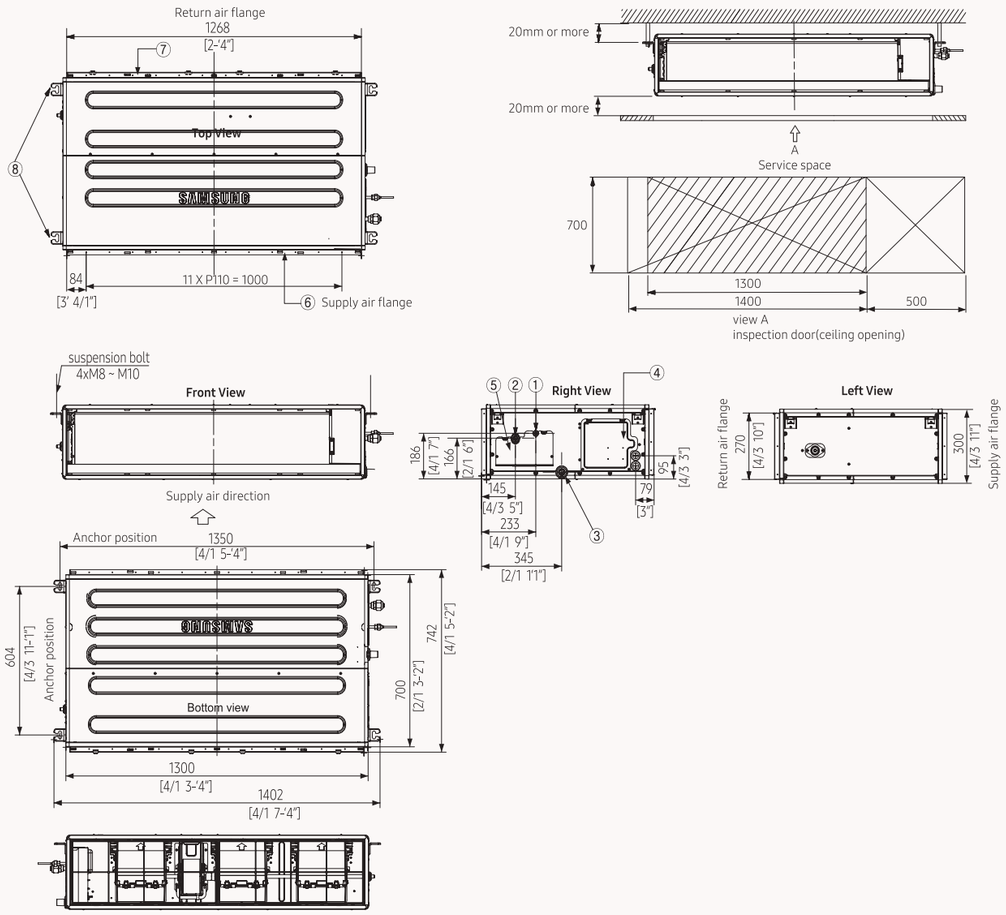


| NO | Name | Description |
|---|---|---|
| 1 | Refrigerant liquid pipe | ø9.52 [3/8] Flare connection |
| 2 | Refrigerant gas pipe | ø15.88 [5/8] Flare connection |
| 3 | Condensate drain | VP25 (OD 32, ID 25) |
| 4 | Power supply/communication wiring conduits | |
| 5 | Refrigerant pipe conduits | |
| 6 | Supply air flange | |
| 7 | Return air flange | |
| 8 | Hook | |

# Specifications

## LSP Slim Duct (drain pump excluded)

- Two-position field adjustable air return, on the bottom or at the rear of the unit.
- Equipped with one Sirocco fan direct driven by a single motor.
- Long-life washable HD 40 permanent filter is included.
- Auto Restart function.
- Optional condensate drain pump.



| Model | | | | AM017FNLDEH/EU | AM022FNLDEH/EU | AM028FNLDEH/EU | AM036FNLDEH/EU |
|---|---|---|---|---|---|---|---|
| Power Supply | | | Φ, #, V, Hz | 1Φ, 2, 220~240 V, 50 Hz | 1Φ, 2, 220~240 V, 50 Hz | 1Φ, 2, 220~240 V, 50 Hz | 1Φ, 2, 220~240 V, 50 Hz |
| Performance | Capacity (Nominal) | Cooling | kW | 1.7 | 2.2 | 2.8 | 3.6 |
| | | Heating | | 1.9 | 2.5 | 3.2 | 4 |
| Power | Power Input (Nominal) | Cooling | W | 55 | 55 | 60 | 65 |
| | | Heating | | 55 | 55 | 60 | 65 |
| | Current Input (Nominal) | Cooling | A | 0.30 | 0.30 | 0.32 | 0.33 |
| | | Heating | | 0.3 | 0.3 | 0.32 | 0.33 |
| Fan | Motor | Type | - | Sirocco Fan | Sirocco Fan | Sirocco Fan | Sirocco Fan |
| | | Number of fans | - | 1 | 1 | 1 | 1 |
| | Airflow Rate | | $m^3$/min | 5.5/4.3/3.2 | 7.0/6.1/5.3 | 7.5/6.6/5.6 | 7.5/6.6/5.6 |
| | | H/M/L (UL) | l/s | 91.67/71.67/53.33 | 116.67/101.67/88.33 | 125.00/110.00/93.33 | 125.00/110.00/93.33 |
| | External Static Pressure | Min/Std/Max | mmAq | 0.00/1.00/3.00 | 0.00/1.00/3.00 | 0.00/1.00/3.00 | 0.00/1.00/3.00 |
| | | | Pa | 0.00/9.81/29.42 | 0.00/9.81/29.42 | 0.00/9.81/29.42 | 0.00/9.81/29.42 |
| | | | WG | 0.000/0.039/0.118 | 0.000/0.039/0.118 | 0.000/0.039/0.118 | 0.000/0.039/0.118 |
| Piping Connections | Liquid Pipe | | ø, mm | 6.35 | 6.35 | 6.35 | 6.35 |
| | | | ø, inch | 1/4 | 1/4 | 1/4 | 1/4 |
| | Gas Pipe | | ø, mm | 12.70 | 12.70 | 12.70 | 12.70 |
| | | | ø, inch | 1/2 | 1/2 | 1/2 | 1/2 |
| | Drain Pipe | | ø, mm | VP25 (OD 32, ID 25) | VP25 (OD 32, ID 25) | VP25 (OD 32, ID 25) | VP25 (OD 32, ID 25) |
| Field Wiring | Power Source Wire | Below 20 m/over 20 m | $mm^2$ | 1.5/2.5 | 1.5/2.5 | 1.5/2.5 | 1.5/2.5 |
| | Transmission Cable | | $mm^2$ | 0.75~1.50 | 0.75~1.50 | 0.75~1.50 | 0.75~1.50 |
| Refrigerant | Type | | - | R410A | R410A | R410A | R410A |
| | Control Method | | - | EEV INCLUDED | EEV INCLUDED | EEV INCLUDED | EEV INCLUDED |
| Sound [2] | Sound Pressure | (H/M/L) | dB(A) | 23/22/20 | 26/24/21 | 28/26/23 | 32/30/27 |
| Dimensions | Net Weight | | kg | 19.0 | 19.0 | 19.0 | 19.5 |
| | Net Dimensions (W x H x D) | | mm | 700 x 199 x 600 | 700 x 199 x 600 | 700 x 199 x 600 | 700 x 199 x 600 |
| Additional Accessories | Drain Pump | Drain Pump | - | MDP-E075SEE3D | MDP-E075SEE3D | MDP-E075SEE3D | MDP-E075SEE3D |
| | | Max. Lifting Height/ Displacement | mm / litres/h | 750/24 | 750/24 | 750/24 | 750/24 |
| | Air Filter | | - | Long-life Filter | Long-life Filter | Long-life Filter | Long-life Filter |



| AM045FNLDEH/EU | AM056FNLDEH/EU | AM071FNLDEH/EU | AM090FNLDEH/EU | AM112FNLDEH/EU | AM128FNLDEH/EU | AM140FNLDEH/EU |
|---|---|---|---|---|---|---|
| 1Φ, 2, 220~240 V, 50 Hz | 1Φ, 2, 220~240 V, 50 Hz | 1Φ, 2, 220~240 V, 50 Hz | 1Φ, 2, 220~240 V, 50 Hz | 1Φ, 2, 220~240 V, 50 Hz | 1Φ, 2, 220~240 V, 50 Hz | 1Φ, 2, 220~240 V, 50 Hz |
| 4.5 | 5.6 | 7.1 | 9 | 11.2 | 12.8 | 14 |
| 5 | 6.3 | 8 | 10 | 12.5 | 13.8 | 16 |
| 90 | 95 | 120 | 170 | 170 | 200 | 220 |
| 90 | 95 | 120 | 170 | 170 | 200 | 220 |
| 0.52 | 0.53 | 0.60 | 0.96 | 0.96 | 1.28 | 1.43 |
| 0.52 | 0.53 | 0.6 | 0.96 | 0.96 | 1.28 | 1.43 |
| Sirocco Fan | Sirocco Fan | Sirocco Fan | Sirocco Fan | Sirocco Fan | Sirocco Fan | Sirocco Fan |
| 1 | 1 | 1 | 1 | 1 | 1 | 1 |
| 11.0/9.6/8.3 | 12.0/10.5/9.0 | 16.5/15.0/13.5 | 29.0/27.0/25.0 | 31.2/29.0/27.0 | 34.0/32.0/30.0 | 36.0/34.0/32.0 |
| 183.33/160.00/138.33 | 200.00/175.00/150.00 | 275.00/250.00/225.00 | 483.33/450.00/416.67 | 520.00/483.33/450.00 | 566.67/533.33/500.00 | 600.00/566.67/533.33 |
| 0.00/2.00/4.00 | 0.00/2.00/4.00 | 0.00/2.00/4.00 | 0.00/3.00/6.00 | 0.00/3.00/6.00 | 0.00/3.00/6.00 | 0.00/3.00/6.00 |
| 0.00/19.61/39.23 | 0.00/19.61/39.23 | 0.00/19.61/39.23 | 0.00/29.42/58.84 | 0.00/29.42/58.84 | 0.00/29.42/58.84 | 0.00/29.42/58.84 |
| 0.000/0.079/0.157 | 0.000/0.079/0.157 | 0.000/0.079/0.157 | 0.000/0.118/0.236 | 0.000/0.118/0.236 | 0.000/0.118/0.236 | 0.000/0.118/0.236 |
| 6.35 | 6.35 | 9.52 | 9.52 | 9.52 | 9.52 | 9.52 |
| 1/4 | 1/4 | 3/8 | 3/8 | 3/8 | 3/8 | 3/8 |
| 12.70 | 12.70 | 15.88 | 15.88 | 15.88 | 15.88 | 15.88 |
| 1/2 | 1/2 | 5/8 | 5/8 | 5/8 | 5/8 | 5/8 |
| VP25 (OD 32, ID 25) | VP25 (OD 32, ID 25) | VP25 (OD 32, ID 25) | VP25 (OD 32, ID 25) | VP25 (OD 32, ID 25) | VP25 (OD 32, ID 25) | VP25 (OD 32, ID 25) |
| 1.5/2.5 | 1.5/2.5 | 1.5/2.5 | 1.5/2.5 | 1.5/2.5 | 1.5/2.5 | 1.5/2.5 |
| 0.75~1.50 | 0.75~1.50 | 0.75~1.50 | 0.75~1.50 | 0.75~1.50 | 0.75~1.50 | 0.75~1.50 |
| R410A | R410A | R410A | R410A | R410A | R410A | R410A |
| EEV INCLUDED | EEV INCLUDED | EEV INCLUDED | EEV INCLUDED | EEV INCLUDED | EEV INCLUDED | EEV INCLUDED |
| 35/31/26 | 36/34/31 | 38/36/33 | 37/36/34 | 37/36/34 | 37/36/34 | 39/38/36 |
| 24.0 | 24.0 | 30.0 | 40.0 | 40.0 | 41.5 | 41.5 |
| 900 x 199 x 600 | 900 x 199 x 600 | 1,100 x 199 x 600 | 1,300 x 295 x 690 | 1,300 x 295 x 690 | 1,300 x 295 x 690 | 1,300 x 295 x 690 |
| MDP-E075SEE3D | MDP-E075SEE3D | MDP-E075SEE3D | MDP-E075SEE3D | MDP-E075SEE3D | MDP-E075SEE3D | MDP-E075SEE3D |
| 750/24 | 750/24 | 750/24 | 750/24 | 750/24 | 750/24 | 750/24 |
| Long-life Filter | Long-life Filter | Long-life Filter | Long-life Filter | Long-life Filter | Long-life Filter | Long-life Filter |

### Accessories










| Drain Pump (optional) | Wireless Remote Controller | Touch Controller | Wired Remote Controller | Wired Remote Controller | Wi-Fi Kit | Wireless Receiver Kit | External Thermostat |
|---|---|---|---|---|---|---|---|
| MDP-E075SEE3D | AR-EH03E (to be matched with MRK-A10N) | MWR-SH11N | MWR-WE13N | MWR-WG00*N | MIM-H04EN | MRK-A10N (to be matched with AR-EH03E) | MRW-TA |

# Dimensional drawings

## LSP Slim Duct (drain pump excluded)

### AM017/022/028/036FNLDEH/EU

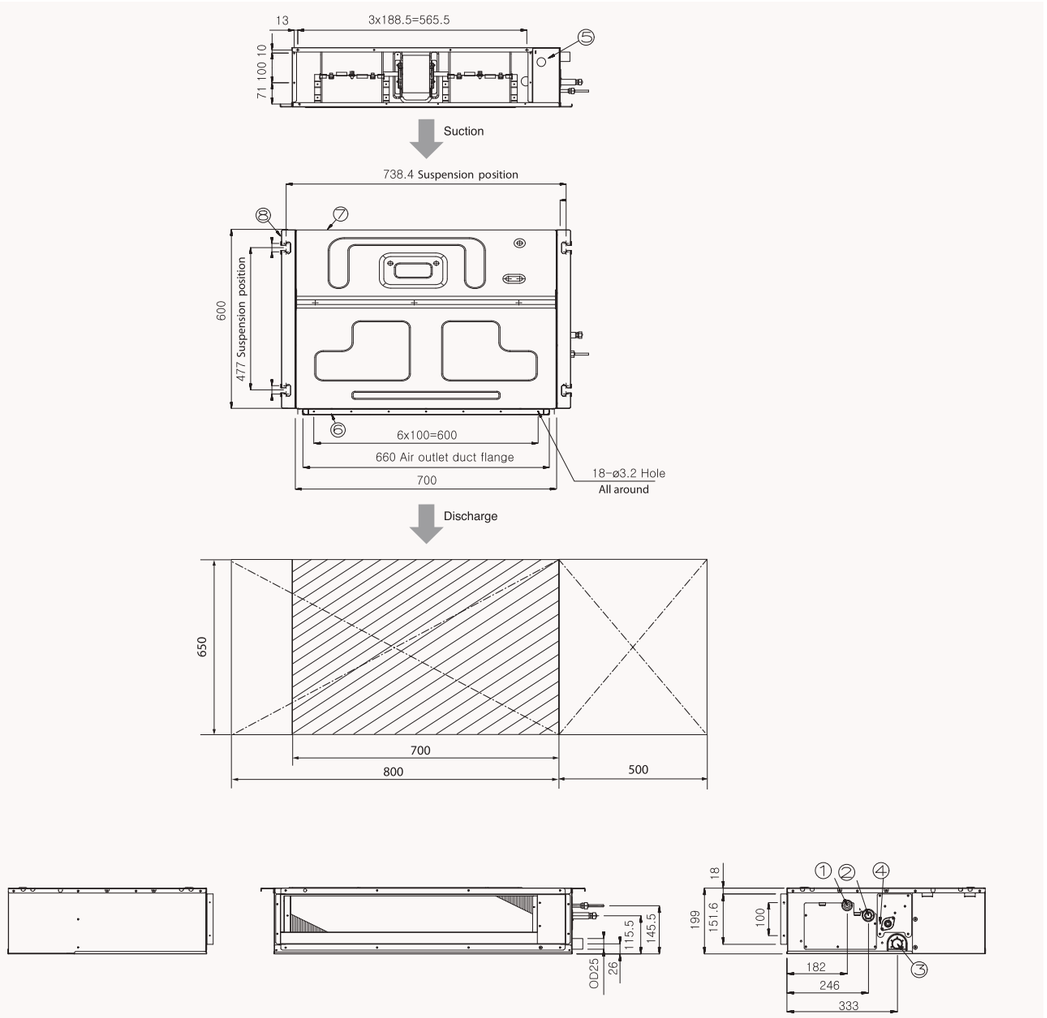


| NO | Name | Description |
|---|---|---|
| 1 | Liquid pipe connection | ø6.35 Flare |
| 2 | Gas pipe connection | ø12.70 Flare |
| 3 | Drain pipe connection without drain pump | VP25 (OD 32, ID 25) |
| 4 | Drain pipe connection with drain pump | VP25 (OD 32, ID 25) |
| 5 | Power supply/communication wiring conduits | |
| 6 | Air discharge grille flange | |
| 7 | Return air side | |
| 8 | Hook | ø9.52 or M10 |

### AM090 /112/128/140*NLDEH/EU

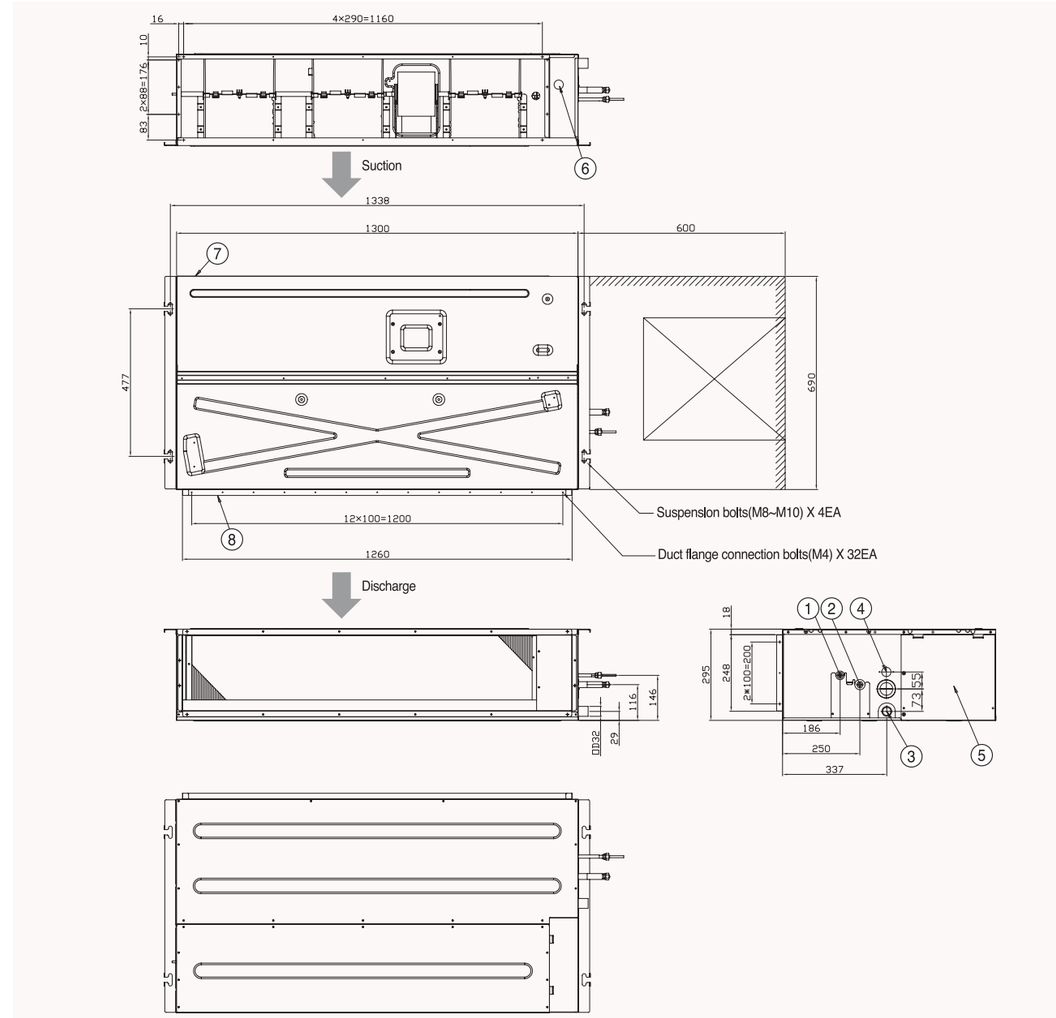


| NO | Name | Description |
|---|---|---|
| 1 | Liquid pipe connection | ø9.52 Flare |
| 2 | Gas pipe connection | ø15.88 Flare |
| 3 | Drain pipe connection without drain pump | VP25 (OD 32, ID 25) |
| 4 | Drain pipe connection with drain pump | VP25 (OD 32, ID 25) |
| 5 | Power supply/communication wiring conduits | |
| 6 | Air discharge grille flange | |
| 7 | Return air side | |
| 8 | Hook | |

# Dimensional drawings

## LSP Slim Duct (drain pump excluded)

### AM045/056*NLDEH/EU

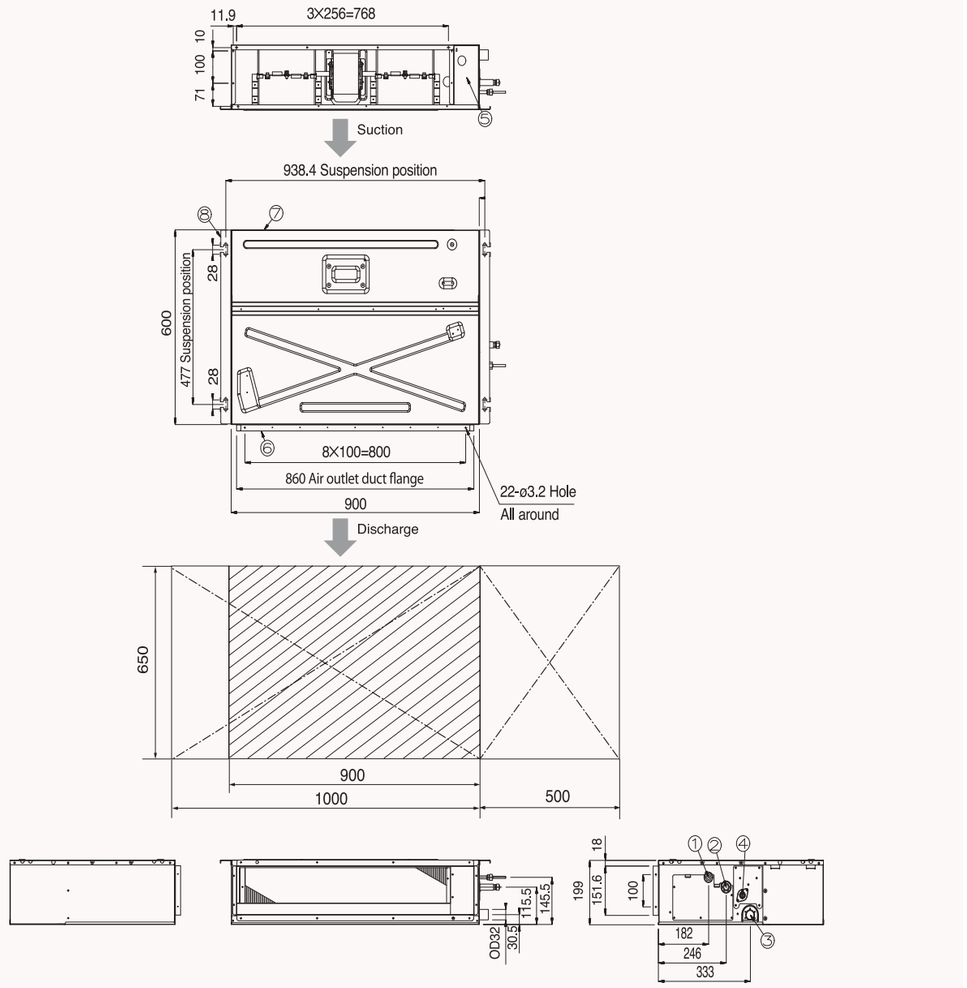


| NO | Name | Description |
|---|---|---|
| 1 | Liquid pipe connection | ø6.35 Flare |
| 2 | Gas pipe connection | ø12.70 Flare |
| 3 | Drain pipe connection without drain pump | VP25 (OD 32, ID 25) |
| 4 | Drain pipe connection with drain pump | VP25 (OD 32, ID 25) |
| 5 | Power supply/communication wiring conduits | |
| 6 | Air discharge grille flange | |
| 7 | Return air side | |
| 8 | Hook | |

### AM071*NLDEH/EU

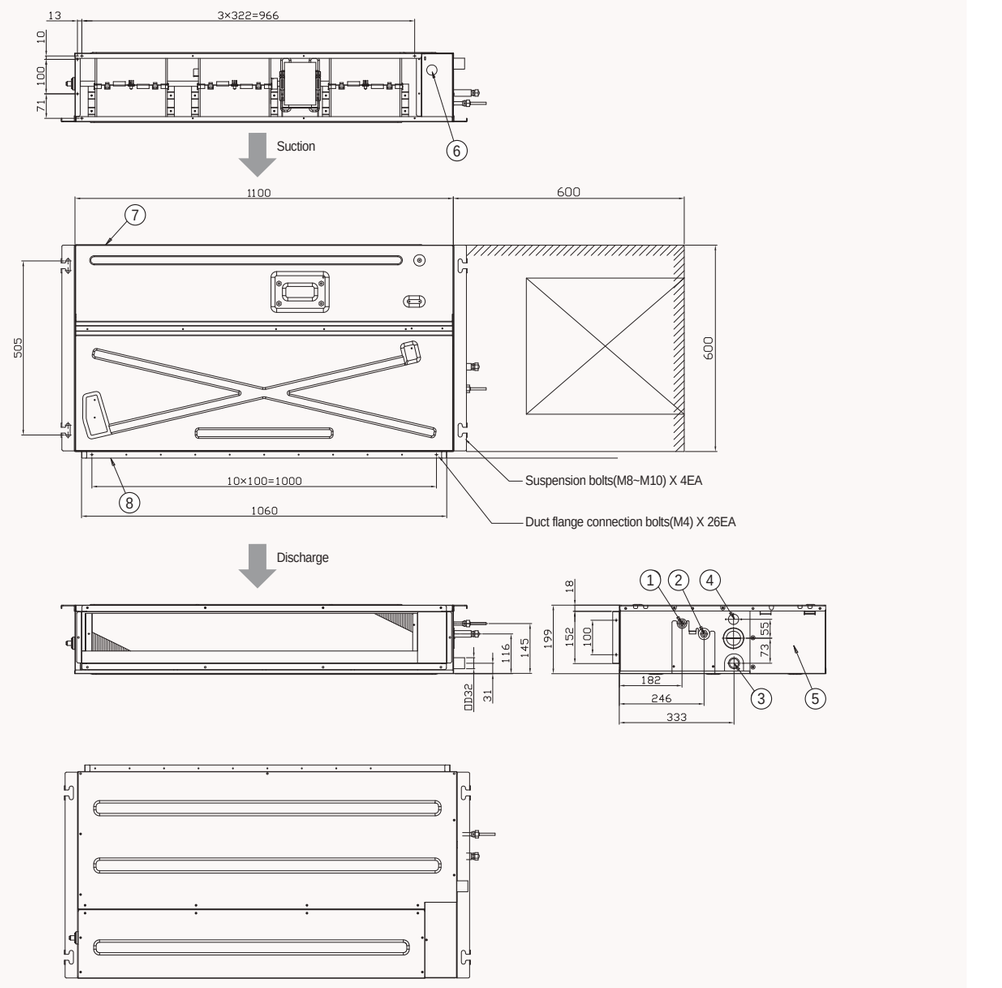


| NO | Name | Description |
|---|---|---|
| 1 | Liquid pipe connection | ø9.52 Flare |
| 2 | Gas pipe connection | ø15.88 Flare |
| 3 | Drain pipe connection without drain pump | VP25 (OD 32, ID 25) |
| 4 | Drain pipe connection with drain pump | VP25 (OD 32, ID 25) |
| 5 | Power supply/communication wiring conduits | |
| 6 | Air discharge grille flange | |
| 7 | Return air side | |
| 8 | Hook | |

# Specifications

## LSP Slim Duct (drain pump included)

- Two-position field adjustable air return, on the bottom or at the rear of the unit.
- Equipped with one Sirocco fan direct driven by a single motor.
- Long-life washable HD 40 permanent filter is included.
- Auto Restart function.
- Built-in condensation drain pump.



| Model | | | | AM017KNLDEH/EU | AM022KNLDEH/EU | AM028KNLDEH/EU | AM036KNLDEH/EU |
|---|---|---|---|---|---|---|---|
| Power Supply | | | Φ, #, V, Hz | 1Φ, 2, 220~240 V, 50 Hz | 1Φ, 2, 220~240 V, 50 Hz | 1Φ, 2, 220~240 V, 50 Hz | 1Φ, 2, 220~240 V, 50 Hz |
| Performance | Capacity (Nominal) | Cooling | kW | 1.7 | 2.2 | 2.8 | 3.6 |
| | | Heating | | 1.9 | 2.5 | 3.2 | 4.0 |
| Power | Power Input (Nominal) | Cooling | W | 28 | 30 | 34 | 40 |
| | | Heating | | 28 | 30 | 36 | 42 |
| | Current Input (Nominal) | Cooling | A | 0.23 | 0.25 | 0.28 | 0.33 |
| | | Heating | | 0.23 | 0.25 | 0.30 | 0.35 |
| Fan | Type | | - | Sirocco Fan | Sirocco Fan | Sirocco Fan | Sirocco Fan |
| | Motor | Output x n | W | 69 x 1 | 69 x 1 | 69 x 1 | 69 x 1 |
| | Airflow Rate | H/M/L (UL) | m³/min | 5.45/4.45/3.80 | 6.00/4.90/3.80 | 7.05/5.15/4.35 | 8.20/6.50/4.90 |
| | | | l/s | 90.83/74.17/63.33 | 100.00/81.67/63.33 | 117.50/85.83/72.50 | 136.67/108.33/81.67 |
| | External Static Pressure | Min/Std/Max | mmAq | 0.00/1.00/3.00 | 0.00/1.00/3.00 | 0.00/1.00/3.00 | 0.00/1.00/3.00 |
| | | | Pa | 0.00/9.81/29.42 | 0.00/9.81/29.42 | 0.00/9.81/29.42 | 0.00/9.81/29.42 |
| Piping Connections | Liquid Pipe | | ø, mm | 6.35 | 6.35 | 6.35 | 6.35 |
| | | | ø, inch | 1/4 | 1/4 | 1/4 | 1/4 |
| | Gas Pipe | | ø, mm | 12.70 | 12.70 | 12.70 | 12.70 |
| | | | ø, inch | 1/2 | 1/2 | 1/2 | 1/2 |
| | Drain Pipe | | ø, mm | VP25 (OD 32, ID 25) | VP25 (OD 32, ID 25) | VP25 (OD 32, ID 25) | VP25 (OD 32, ID 25) |
| Field Wiring | Power Source Wire | | mm² | 1.5~2.5 | 1.5~2.5 | 1.5~2.5 | 1.5~2.5 |
| | Transmission Cable | | mm² | 0.75~1.50 | 0.75~1.50 | 0.75~1.50 | 0.75~1.50 |
| Refrigerant | Type | | - | R410A | R410A | R410A | R410A |
| | Control Method | | - | EEV INCLUDED | EEV INCLUDED | EEV INCLUDED | EEV INCLUDED |
| Sound [2] | Sound Pressure | (H/M/L) | dB(A) | 25/22/19 | 26/23/19 | 28/24/19 | 31/26/ 20 |
| | Sound Power | Cooling | | 40 | 42 | 44 | 46 |
| Dimensions | Net Weight | | kg | 15.3 | 15.3 | 15.3 | 15.7 |
| | Net Dimensions (W × H × D) | | mm | 700 x 199 x 440 | 700 x 199 x 440 | 700 x 199 x 440 | 700 x 199 x 440 |
| Additional Accessories | Drain Pump | Drain Pump | - | Included | Included | Included | Included |
| | | Max. Lifting Height/ Displacement | mm / litres/h | 750/24 | 750/24 | 750/24 | 750/24 |
| | Air Filter | | - | Filter Included | Filter Included | Filter Included | Filter Included |



| AM045KNLDEH/EU | AM056KNLDEH/EU | AM071KNLDEH/EU | AM090KNLDEH/EU | AM112KNLDEH/EU | AM140KNLDEH/EU |
|---|---|---|---|---|---|
| 1Φ, 2, 220~240 V, 50 Hz | 1Φ, 2, 220~240 V, 50 Hz | 1Φ, 2, 220~240 V, 50 Hz | 1Φ, 2, 220~240 V, 50 Hz | 1Φ, 2, 220~240 V, 50 Hz | 1Φ, 2, 220~240 V, 50 Hz |
| 4.5 | 5.6 | 7.1 | 9.0 | 11.2 | 14.0 |
| 5.0 | 6.3 | 8.0 | 10.0 | 12.5 | 16.0 |
| 90 | 95 | 120 | 170 | 170 | 220 |
| 90 | 95 | 120 | 170 | 170 | 220 |
| 0.52 | 0.53 | 0.60 | 0.96 | 0.96 | 1.43 |
| 0.52 | 0.53 | 0.60 | 0.96 | 0.96 | 1.43 |
| Sirocco Fan | Sirocco Fan | Sirocco Fan | Sirocco Fan | Sirocco Fan | Sirocco Fan |
| - | - | - | - | - | - |
| 11.00/9.60/8.30 | 12.00/10.50/9.00 | 16.50/15.00/13.50 | 29.00/27.00/25.00 | 31.20/29.00/27.00 | 36.00/34.00/32.00 |
| 183.33/160.00/138.33 | 200.00/175.00/150.00 | 275.00/250.00/225.00 | 483.33/450.00/416.67 | 520.00/483.33/450.00 | 600.00/566.67/533.33 |
| 0.00/2.00/4.00 | 0.00/2.00/4.00 | 0.00/2.00/4.00 | 0.00/3.00/6.00 | 0.00/3.00/6.00 | 0.00/3.00/6.00 |
| 0.00/19.61/39.23 | 0.00/19.61/39.23 | 0.00/19.61/39.23 | 0.00/29.42/58.84 | 0.00/29.42/58.84 | 0.00/29.42/58.84 |
| 6.35 | 6.35 | 9.52 | 9.52 | 9.52 | 9.52 |
| 1/4 | 1/4 | 3/8 | 3/8 | 3/8 | 3/8 |
| 12.70 | 12.70 | 15.88 | 15.88 | 15.88 | 15.88 |
| 1/2 | 1/2 | 5/8 | 5/8 | 5/8 | 5/8 |
| VP25 (OD 32, ID 25) | VP25 (OD 32, ID 25) | VP25 (OD 32, ID 25) | VP25 (OD 32, ID 25) | VP25 (OD 32, ID 25) | VP25 (OD 32, ID 25) |
| 1.5~2.5 | 1.5~2.5 | 1.5~2.5 | 1.5~2.5 | 1.5~2.5 | 1.5~2.5 |
| 0.75~1.50 | 0.75~1.50 | 0.75~1.50 | 0.75~1.50 | 0.75~1.50 | 0.75~1.50 |
| R410A | R410A | R410A | R410A | R410A | R410A |
| EEV INCLUDED | EEV INCLUDED | EEV INCLUDED | EEV INCLUDED | EEV INCLUDED | EEV INCLUDED |
| 35/31/26 | 36/34/31 | 38/36/33 | 37/36/34 | 37/36/34 | 39/38/36 |
| 53 | 55 | 57 | 66 | 66 | 68 |
| 24.5 | 24.5 | 30.5 | 40.5 | 40.5 | 42.0 |
| 900 x 199 x 600 | 900 x 199 x 600 | 1,100 x 199 x 600 | 1,300 x 295 x 690 | 1,300 x 295 x 690 | 1,300 x 295 x 690 |
| Included | Included | Included | Included | Included | Included |
| 750/24 | 750/24 | 750/24 | 750/24 | 750/24 | 750/24 |
| Filter Included | Filter Included | Filter Included | Filter Included | Filter Included | Filter Included |

### Accessories



| External Drain Pump | Built-in Drain Pump | Wireless Remote Controller | Touch Controller | Wired Remote Controller | Wired Remote Controller | Wi-Fi Kit | Wireless Receiver Kit | External Thermostat |
|---|---|---|---|---|---|---|---|---|
| MDP-G075SP | MDP-G075SQ | AR-EH03E (to be matched with MRK-A10N) | MWR-SH11N | MWR-WE13N | MWR-WG00*N | MIM-H04EN | MRK-A10N (to be matched with AR-EH03E) | MRW-TA |

# Dimensional drawings

## LSP Slim Duct (drain pump included)

### AM017/022/028/036KNLDEH/EU

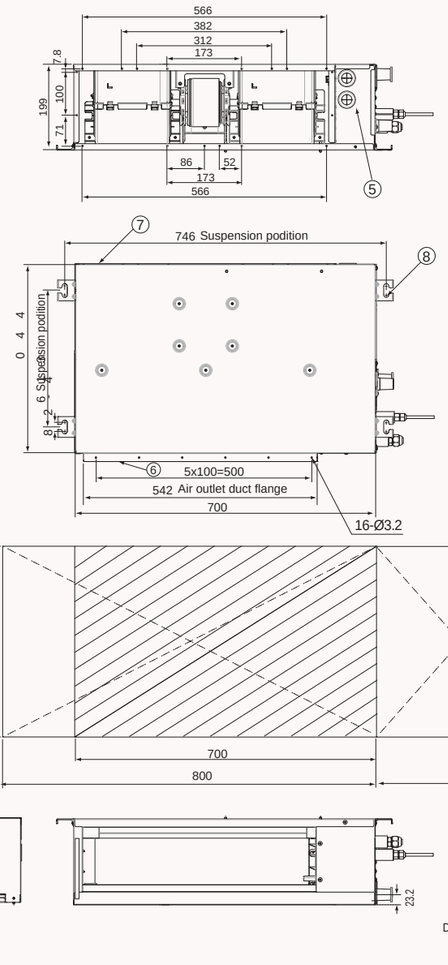


| NO | Name | Description |
|---|---|---|
| 1 | Liquid pipe connection | ø6.35 Flare |
| 2 | Gas pipe connection | ø12.70 Flare |
| 3 | Drain pipe connection without drain pump | VP25 (OD 32, ID 25) |
| 4 | Drain pipe connection with drain pump | VP25 (OD 32, ID 25) |
| 5 | Power supply/communication wiring conduits | |
| 6 | Air discharge grille flange | |
| 7 | Return air side | |
| 8 | Hook | ø9.52 or M10 |

### AM090/112/128/140*NLDEH/EU

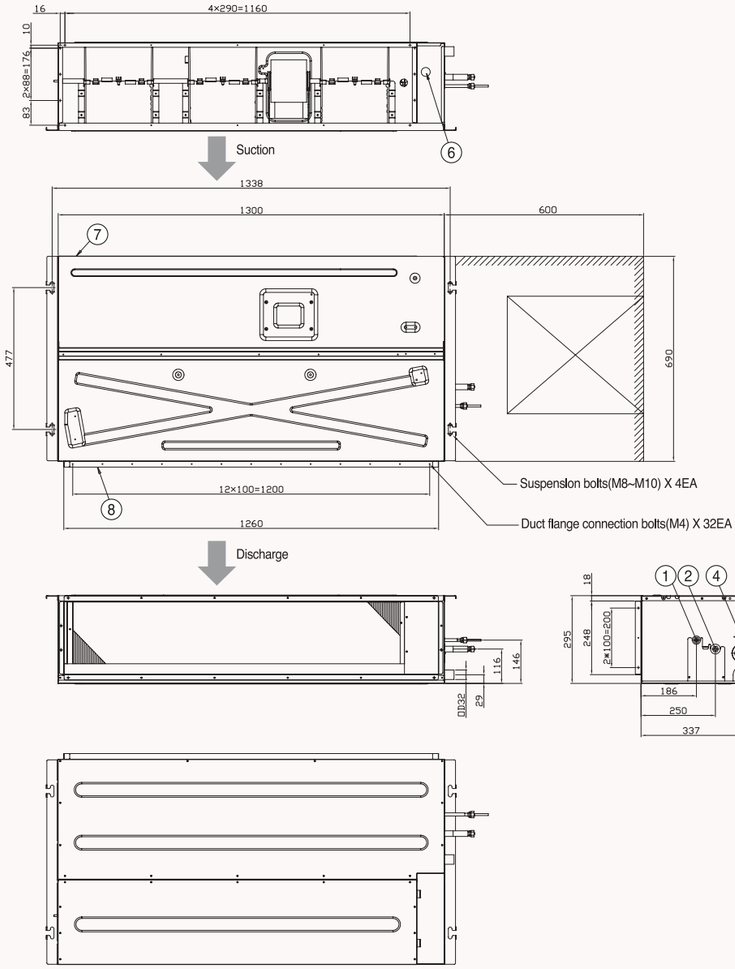


| NO | Name | Description |
|---|---|---|
| 1 | Liquid pipe connection | ø9.52 Flare |
| 2 | Gas pipe connection | ø15.88 Flare |
| 3 | Drain pipe connection without drain pump | VP25 (OD 32, ID 25) |
| 4 | Drain pipe connection with drain pump | VP25 (OD 32, ID 25) |
| 5 | Power supply/communication wiring conduits | |
| 6 | Air discharge grille flange | |
| 7 | Return air side | |
| 8 | Hook | |

# Dimensional drawings

## LSP Slim Duct (drain pump included)

### AM045/056*NLDEH/EU

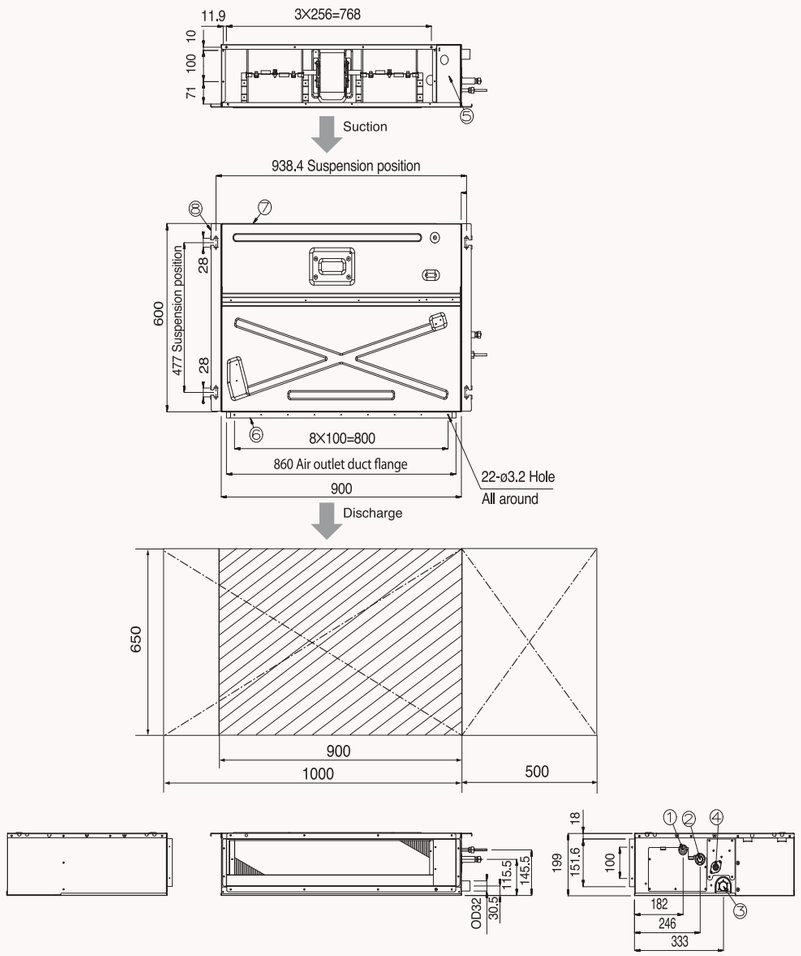


| NO | Name | Description |
|---|---|---|
| 1 | Liquid pipe connection | ø6.35 Flare |
| 2 | Gas pipe connection | ø12.70 Flare |
| 3 | Drain pipe connection without drain pump | VP25 (OD 32, ID 25) |
| 4 | Drain pipe connection with drain pump | VP25 (OD 32, ID 25) |
| 5 | Power supply/communication wiring conduits | |
| 6 | Air discharge grille flange | |
| 7 | Return air side | |
| 8 | Hook | |

### AM071*NLDEH/EU

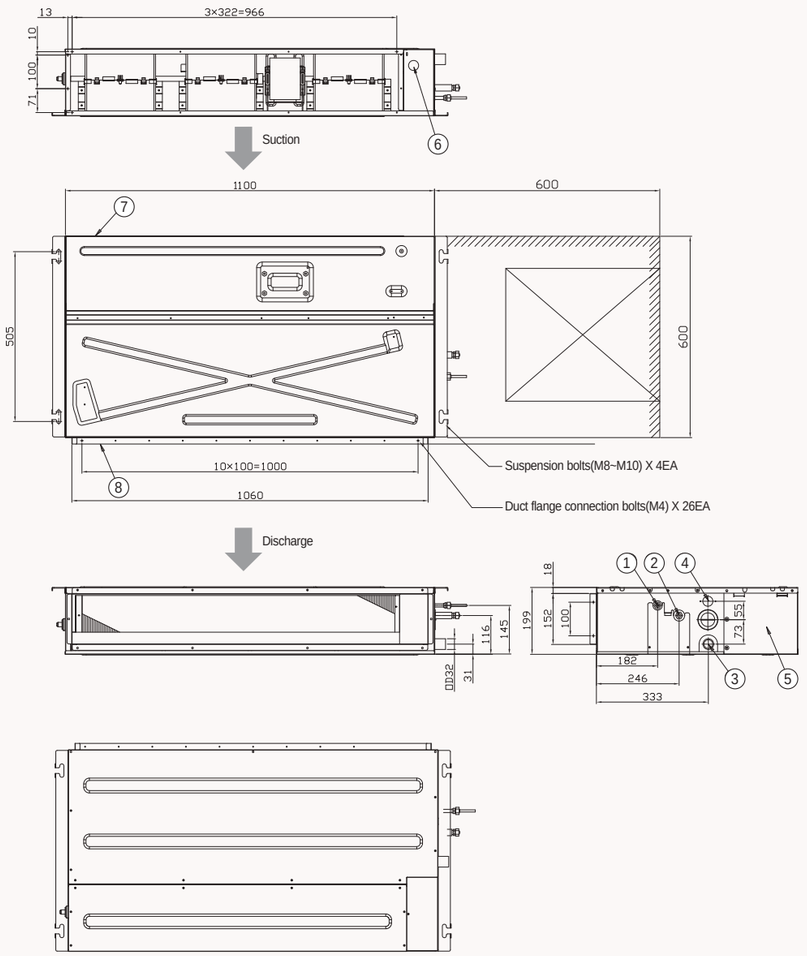


| NO | Name | Description |
|---|---|---|
| 1 | Liquid pipe connection | ø9.52 Flare |
| 2 | Gas pipe connection | ø15.88 Flare |
| 3 | Drain pipe connection without drain pump | VP25 (OD 32, ID 25) |
| 4 | Drain pipe connection with drain pump | VP25 (OD 32, ID 25) |
| 5 | Power supply/communication wiring conduits | |
| 6 | Air discharge grille flange | |
| 7 | Return air side | |
| 8 | Hook | |

# Specifications

## MSP Duct (drain pump excluded)

- Two-position field adjustable air return, on the bottom or at the rear of the unit.
- Equipped with one Sirocco fan direct driven by a single motor.
- Long-life washable permanent filter is included.
- Auto Restart function.
- Optional condensate drain pump.



| Model | | | | AM022FNMDEH/EU | AM028FNMDEH/EU | AM036FNMDEH/EU |
|---|---|---|---|---|---|---|
| Power Supply | | | Φ, #, V, Hz | 1Φ, 2, 220~240 V, 50 Hz | 1Φ, 2, 220~240 V, 50 Hz | 1Φ, 2, 220~240 V, 50 Hz |
| Performance | Capacity (Nominal) | Cooling | kW | 2.2 | 2.8 | 3.6 |
| | | Heating | | 2.5 | 3.2 | 4 |
| Power | Power Input (Nominal) | Cooling | W | 80 | 80 | 85 |
| | | Heating | | 80 | 80 | 85 |
| | Current Input (Nominal) | Cooling | A | 0.40 | 0.40 | 0.55 |
| | | Heating | | 0.40 | 0.40 | 0.55 |
| Fan | Motor | Type | - | Sirocco Fan | Sirocco Fan | Sirocco Fan |
| | | Output x n | W | 69 x 1 | 69 x 1 | 112 x 1 |
| | | Number of Fans | - | 1 | 1 | 1 |
| | Airflow Rate | H/M/L (UL) | m³/min | 8.50/7.50/6.30 | 10.00/9.20/7.50 | 12.00/10.20/8.80 |
| | | | l/s | 141.67/125.00/105.00 | 166.67/153.33/125.00 | 200.00/170.00/146.67 |
| | External Static Pressure | Min/Std/Max | mmAq | 0.00/2.00/6.00 | 0.00/2.00/6.00 | 0.00/2.00/6.00 |
| | | | Pa | 0.00/19.61/58.84 | 0.00/19.61/58.84 | 0.00/19.61/58.84 |
| | | | WG | 0.000/0.079/0.236 | 0.000/0.079/0.236 | 0.000/0.079/0.236 |
| Piping Connections | Liquid Pipe | | ø, mm | 6.35 | 6.35 | 6.35 |
| | | | ø, inch | 1/4 | 1/4 | 1/4 |
| | Gas Pipe | | ø, mm | 12.7 | 12.7 | 12.7 |
| | | | ø, inch | 1/2 | 1/2 | 1/2 |
| | Drain Pipe | | ø, mm | VP25 (OD 32, ID 25) | VP25 (OD 32, ID 25) | VP25 (OD 32, ID 25) |
| Field Wiring | Power Source Wire | Below 20 m/over 20 m | mm² | 1.5/2.5 | 1.5/2.5 | 1.5/2.5 |
| | Transmission Cable | | mm² | 0.75~1.50 | 0.75~1.50 | 0.75~1.50 |
| Refrigerant | Type | | - | R410A | R410A | R410A |
| | Control Method | | - | EEV INCLUDED | EEV INCLUDED | EEV INCLUDED |
| Sound [2] | Sound Pressure | (H/M/L) | dB(A) | 23/21/19 | 24/22/19 | 29/27/24 |
| Dimensions | Net Weight | | kg | 23.5 | 23.5 | 23.5 |
| | Net Dimensions (W x H x D) | | mm | 900 x 199 x 600 | 900 x 199 x 600 | 900 x 199 x 600 |
| Additional Accessories | Drain Pump | Drain Pump | - | MDP-E075SEE3D | MDP-E075SEE3D | MDP-E075SEE3D |
| | | Max. Lifting Height/ Displacement | mm / litres/h | 750/24 | 750/24 | 750/24 |
| | Air Filter | | - | Long-life Filter | Long-life Filter | Long-life Filter |



| AM045FNMDEH/EU | AM056FNMDEH/EU | AM071FNMDEH/EU | AM090FNMDEH/EU | AM112FNMDEH/EU |
|---|---|---|---|---|
| 1Φ, 2, 220~240 V, 50 Hz | 1Φ, 2, 220~240 V, 50 Hz | 1Φ, 2, 220~240 V, 50 Hz | 1Φ, 2, 220~240 V, 50 Hz | 1Φ, 2, 220~240 V, 50 Hz |
| 4.5 | 5.6 | 7.1 | 9 | 11.2 |
| 5 | 6.3 | 8 | 10 | 12.5 |
| 125 | 130 | 190 | 240 | 260 |
| 125 | 130 | 190 | 240 | 260 |
| 1.15 | 1.10 | 1.25 | 1.30 | 1.17 |
| 1.15 | 1.10 | 1.25 | 1.30 | 1.17 |
| Sirocco Fan | Sirocco Fan | Sirocco Fan | Sirocco Fan | Sirocco Fan |
| 219 x 1 | 124 x 1 | 124 x 1 | 130 x 1 | 130 x 1 |
| 1 | 1 | 1 | 1 | 1 |
| 14.00/12.00/10.50 | 14.50/13.00/11.50 | 18.50/17.00/15.50 | 19.50/18.00/16.50 | 27.00/25.00/23.00 |
| 233.33/200.00/175.00 | 241.67/216.67/191.67 | 308.33/283.33/258.33 | 325.00/300.00/275.00 | 450.00/416.67/383.33 |
| 0.00/4.00/8.00 | 0.00/4.00/8.00 | 0.00/4.00/8.00 | 4.00/6.00/8.00 | 4.00/8.00/12.00 |
| 0.00/39.23/78.45 | 0.00/39.23/78.45 | 0.00/39.23/78.45 | 39.23/58.84/78.45 | 39.23/78.45/117.68 |
| 0.000/0.157/0.314 | 0.000/0.157/0.314 | 0.000/0.157/0.314 | 0.157/0.236/0.315 | 0.236/0.314/0.472 |
| 6.35 | 6.35 | 9.52 | 9.52 | 9.52 |
| 1/4 | 1/4 | 3/8 | 3/8 | 3/8 |
| 12.7 | 12.7 | 15.88 | 15.88 | 15.88 |
| 1/2 | 1/2 | 5/8 | 5/8 | 5/8 |
| VP25 (OD 32, ID 25) | VP25 (OD 32, ID 25) | VP25 (OD 32, ID 25) | VP25 (OD 32, ID 25) | VP25 (OD 32, ID 25) |
| 1.5/2.5 | 1.5/2.5 | 1.5/2.5 | 1.5/2.5 | 1.5/2.5 |
| 0.75~1.50 | 0.75~1.50 | 0.75~1.50 | 0.75~1.50 | 0.75~1.50 |
| R410A | R410A | R410A | R410A | R410A |
| EEV INCLUDED | EEV INCLUDED | EEV INCLUDED | EEV INCLUDED | EEV INCLUDED |
| 32/30/28 | 35/33/31 | 39/35/31 | 40/37/34 | 41/40/38 |
| 28.0 | 28.0 | 28.0 | 32.0 | 35.5 |
| 900 x 260 x 480 | 900 x 260 x 480 | 900 x 260 x 480 | 1,150 x 260 x 480 | 1,150 x 320 x 480 |
| MDP-M075SGU3D | MDP-M075SGU3D | MDP-M075SGU3D | MDP-M075SGU1D | MDP-M075SGU1D |
| 750/24 | 750/24 | 750/24 | 750/24 | 750/24 |
| Long-life Filter | Long-life Filter | Long-life Filter | Long-life Filter | Long-life Filter |

### Accessories



| Drain Pump (excluded) | Drain Pump (excluded) | Wireless Remote Controller | Touch Controller | Wired Remote Controller | Wired Remote Controller | Wi-Fi Kit | Wireless Receiver Kit | External Thermostat |
|---|---|---|---|---|---|---|---|---|
| MDP-E075SEE3D | MDP-N047SNC1D | AR-EH03E (to be matched with MRK-A10N) | MWR-SH11N | MWR-WE13N | MWR-WG00*N | MIM-H04EN | MRK-A10N (to be matched with AR-EH03E) | MRW-TA |

# Specifications

## MSP Duct (drain pump included)

- Two-position field adjustable air return, on the bottom or at the rear of the unit.
- Equipped with one Sirocco fan direct driven by a single motor.
- Long-life washable permanent filter is included.
- Auto Restart function.
- Built-in condensation drain pump.





| Model | | | | AM022KNMDEH/EU | AM028KNMDEH/EU | AM036KNMDEH/EU |
|---|---|---|---|---|---|---|
| Power Supply | | | Φ, #, V, Hz | 1Φ, 2, 220~240 V, 50 Hz | 1Φ, 2, 220~240 V, 50 Hz | 1Φ, 2, 220~240 V, 50 Hz |
| Performance | Capacity (Nominal) | Cooling | kW | 2.2 | 2.8 | 3.6 |
| | | Heating | | 2.5 | 3.2 | 4.0 |
| Power | Power Input (Nominal) | Cooling | W | 80 | 80 | 85 |
| | | Heating | | 80 | 80 | 85 |
| | Current Input (Nominal) | Cooling | A | 0.40 | 0.40 | 0.55 |
| | | Heating | | 0.40 | 0.40 | 0.55 |
| | Motor | Type | - | Sirocco Fan | Sirocco Fan | Sirocco Fan |
| | | Output x n | W | 69 x 1 | 69 x 1 | 112 x 1 |
| | | Number of Fans | - | 1 | 1 | 1 |
| | Airflow Rate | H/M/L (UL) | $m^3$/min | 8.50/7.50/6.30 | 10.00/9.20/7.50 | 12.00/10.20/8.80 |
| | | | l/s | 141.67/125.00/105.00 | 166.67/153.33/125.00 | 200.00/170.00/146.67 |
| | External Static Pressure | Min/Std/Max | mmAq | 0.00/2.00/6.00 | 0.00/2.00/6.00 | 0.00/2.00/6.00 |
| | | | Pa | 0.00/19.61/58.84 | 0.00/19.61/58.84 | 0.00/19.61/58.84 |
| Piping Connections | Liquid Pipe | | ø, mm | 6.35 | 6.35 | 6.35 |
| | | | ø, inch | 1/4 | 1/4 | 1/4 |
| | Gas Pipe | | ø, mm | 12.70 | 12.70 | 12.70 |
| | | | ø, inch | 1/2 | 1/2 | 1/2 |
| | Drain Pipe | | ø, mm | VP25 (OD 32, ID 25) | VP25 (OD 32, ID 25) | VP25 (OD 32, ID 25) |
| Field Wiring | Power Source Wire | | $mm^2$ | 1.5~2.5 | 1.5~2.5 | 1.5~2.5 |
| | Transmission Cable | | $mm^2$ | 0.75~1.50 | 0.75~1.50 | 0.75~1.50 |
| Refrigerant | Type | | - | R410A | R410A | R410A |
| | Control Method | | - | EEV INCLUDED | EEV INCLUDED | EEV INCLUDED |
| Sound [2] | Sound Pressure | (H/M/L) | dB(A) | 23/21/19 | 24/22/19 | 29/27/24 |
| | Sound Power | Cooling | | 47 | 48 | 53 |
| Dimensions | Net Weight | | kg | 24.0 | 24.0 | 24.0 |
| | Net Dimensions (W × H × D) | | mm | 900 x 199 x 600 | 900 x 199 x 600 | 900 x 199 x 600 |
| Additional Accessories | Drain Pump | Drain Pump | - | Included | Included | Included |







| AM045KNMDEH/EU | AM056KNMDEH/EU | AM071KNMDEH/EU | AM090KNMDEH/EU | AM112KNMDEH/EU |
|---|---|---|---|---|
| 1Φ, 2, 220~240 V, 50 Hz | 1Φ, 2, 220~240 V, 50 Hz | 1Φ, 2, 220~240 V, 50 Hz | 1Φ, 2, 220~240 V, 50 Hz | 1Φ, 2, 220~240 V, 50 Hz |
| 4.5 | 5.6 | 7.1 | 9.0 | 11.2 |
| 5.0 | 6.3 | 8.0 | 10.0 | 12.5 |
| 125 | 130 | 190 | 240 | 260 |
| 125 | 130 | 190 | 240 | 260 |
| 1.15 | 1.10 | 1.25 | 1.30 | 1.17 |
| 1.15 | 1.10 | 1.25 | 1.30 | 1.17 |
| Sirocco Fan | Sirocco Fan | Sirocco Fan | Sirocco Fan | Sirocco Fan |
| 219 x 1 | 124 x 1 | 124 x 1 | 130 x 1 | 130 x 1 |
| 1 | 1 | 1 | 1 | 1 |
| 14.00/12.00/10.50 | 14.50/13.00/11.50 | 18.50/17.00/15.50 | 19.50/18.00/16.50 | 27.00/25.00/23.00 |
| 233.33/200.00/175.00 | 241.67/216.67/191.67 | 308.33/283.33/258.33 | 325.00/300.00/275.00 | 450.00/416.67/383.33 |
| 0.00/4.00/8.00 | 0.00/4.00/8.00 | 0.00/4.00/8.00 | 4.00/6.00/8.00 | 4.00/8.00/12.00 |
| 0.00/39.23/78.45 | 0.00/39.23/78.45 | 0.00/39.23/78.45 | 39.23/58.84/78.45 | 39.23/78.45/117.68 |
| 6.35 | 6.35 | 9.52 | 9.52 | 9.52 |
| 1/4 | 1/4 | 3/8 | 3/8 | 3/8 |
| 12.70 | 12.70 | 15.88 | 15.88 | 15.88 |
| 1/2 | 1/2 | 5/8 | 5/8 | 5/8 |
| VP25 (OD 32, ID 25) | VP25 (OD 32, ID 25) | VP25 (OD 32, ID 25) | VP25 (OD 32, ID 25) | VP25 (OD 32, ID 25) |
| 1.5~2.5 | 1.5~2.5 | 1.5~2.5 | 1.5~2.5 | 1.5~2.5 |
| 0.75~1.50 | 0.75~1.50 | 0.75~1.50 | 0.75~1.50 | 0.75~1.50 |
| R410A | R410A | R410A | R410A | R410A |
| EEV INCLUDED | EEV INCLUDED | EEV INCLUDED | EEV INCLUDED | EEV INCLUDED |
| 32/30/28 | 35/33/31 | 39/35/31 | 40/37/34 | 41/40/38 |
| 54 | 57 | 61 | 63 | 66 |
| 28.5 | 28.5 | 28.5 | 32.5 | 36.0 |
| 900 x 260 x 480 | 900 x 260 x 480 | 900 x 260 x 480 | 1,150 x 260 x 480 | 1,150 x 320 x 480 |
| Included | Included | Included | Included | Included |

### Accessories











| Drain Pump (included) | Drain Pump (included) | Wireless Remote Controller | Touch Controller | Wired Remote Controller | Wired Remote Controller | Wi-Fi Kit | Wireless Receiver Kit | External Thermostat |
|---|---|---|---|---|---|---|---|---|
| MDP-E075SEE3D | MDP-M075SGU1D | AR-EH03E (to be matched with MRK-A10N) | MWR-SH11N | MWR-WE13N | MWR-WG00*N | MIM-H04EN | MRK-A10N (to be matched with AR-EH03E) | MRW-TA |

# Dimensional drawings

## MSP Duct

AM022/028/036*NMDEH/EU

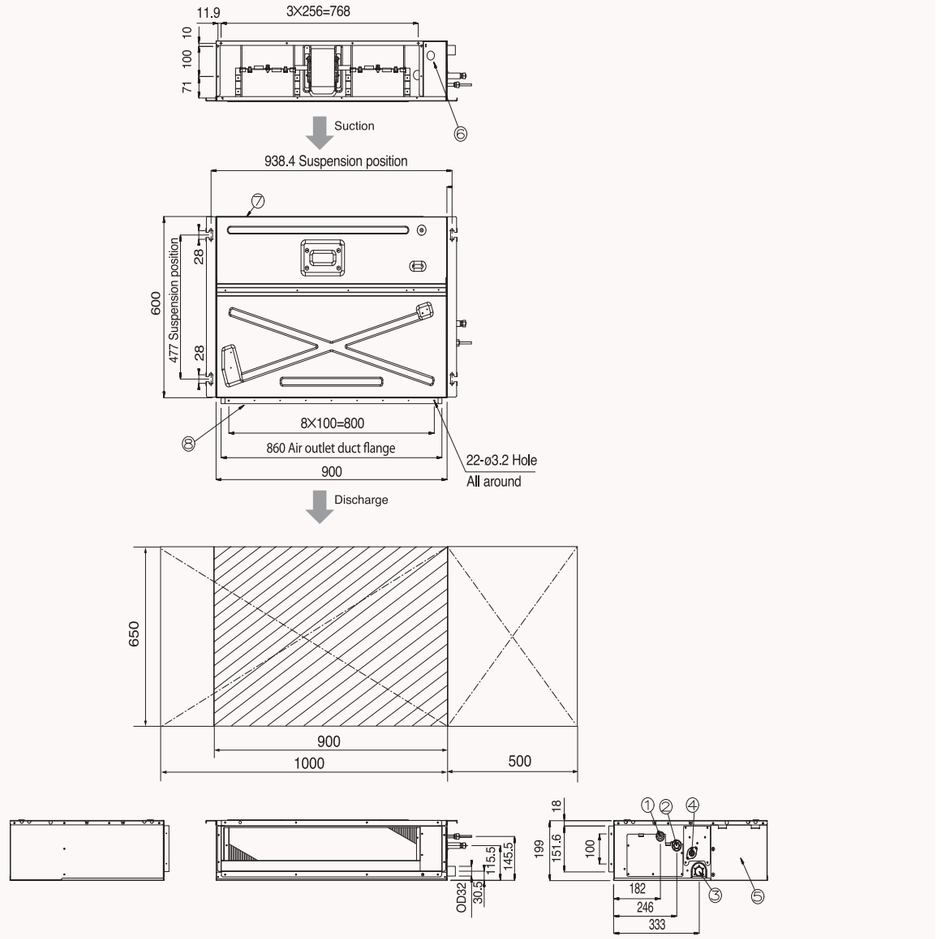


| NO | Name | Description |
|---|---|---|
| 1 | Liquid pipe connection | ø6.35 Flare |
| 2 | Gas pipe connection | ø12.70 Flare |
| 3 | Drain pipe connection without drain pump | VP25 (OD 32, ID 25) |
| 4 | Drain pipe connection with drain pump | VP25 (OD 32, ID 25) |
| 5 | Control unit | |
| 6 | Power supply/communication wiring conduits | |
| 7 | Return air side | |
| 8 | Air outlet duct flange | |

AM045/056/071*NMDEH/EU

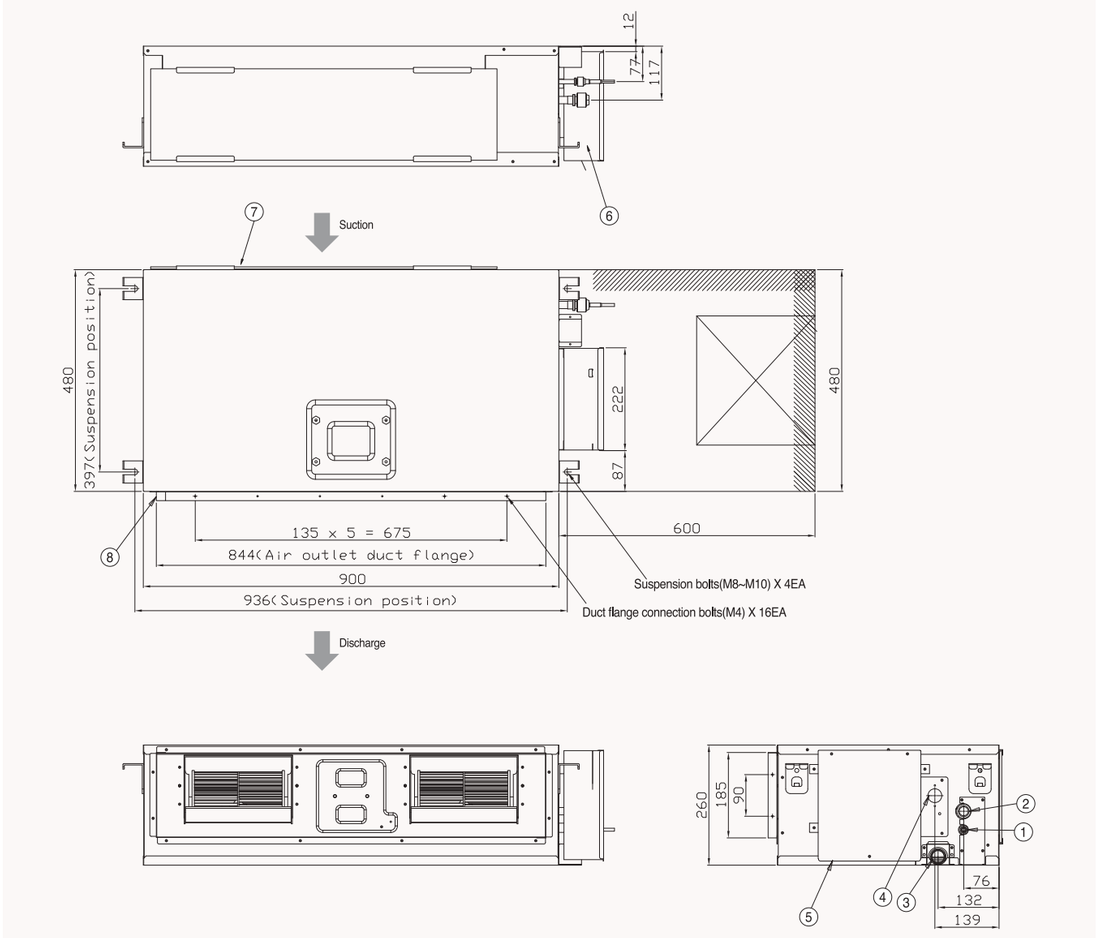


| NO | Name | Description | | |
|---|---|---|---|---|
| | | 4.5 kW | 5.6 kW | 7.1 kW |
| 1 | Liquid pipe connection | ø6.35 Flare | | ø9.52 Flare |
| 2 | Gas pipe connection | ø12.70 Flare | | ø15.88 Flare |
| 3 | Drain pipe connection without drain pump | VP25 (OD 32, ID 25) | | |
| 4 | Drain pipe connection with drain pump | VP25 (OD 32, ID 25) | | |
| 5 | Control unit | | | |
| 6 | Power supply/communication wiring conduits | | | |
| 7 | Return air side | | | |
| 8 | Air outlet duct flange | | | |

# Dimensional drawings

## MSP Duct

### AM090*NMDEH/EU

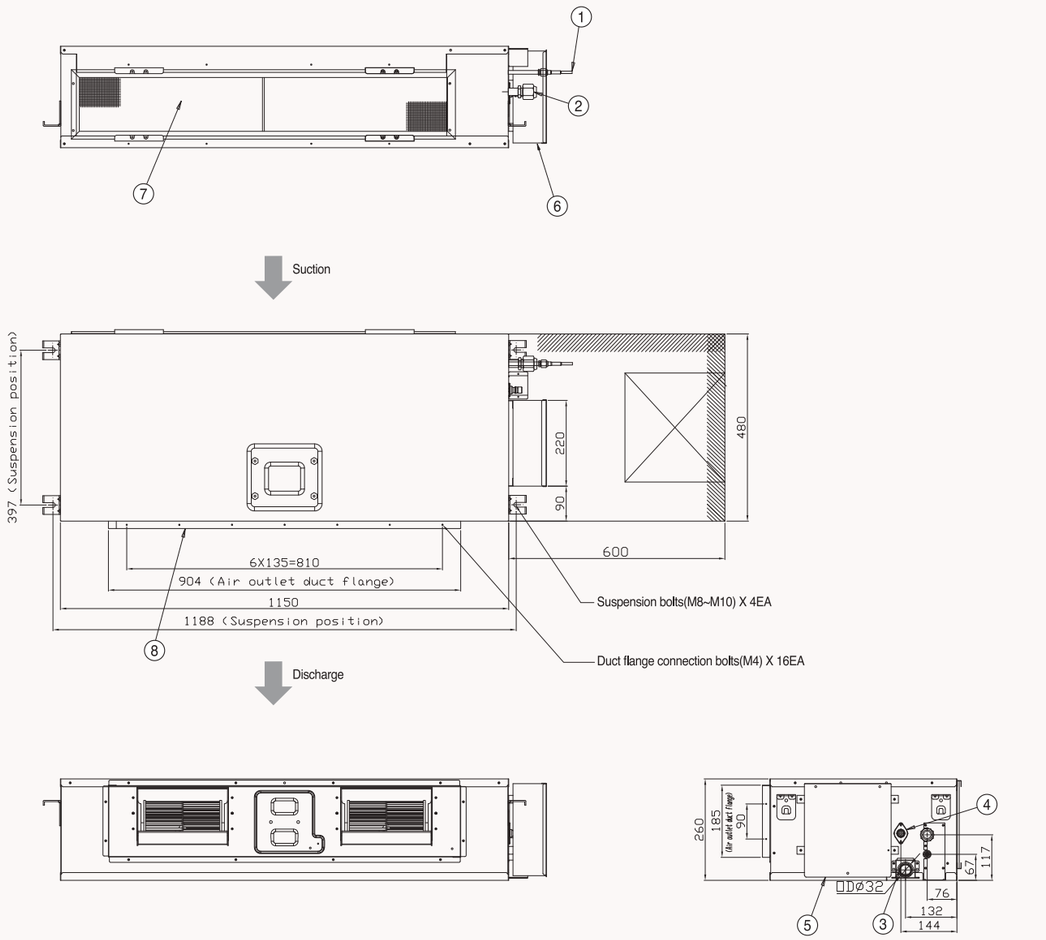


| NO | Name | Description |
|---|---|---|
| 1 | Liquid pipe connection | ø9.52 Flare |
| 2 | Gas pipe connection | ø15.88 Flare |
| 3 | Drain pipe connection without drain pump | VP25 (OD 32, ID 25) |
| 4 | Drain pipe connection with drain pump | VP25 (OD 32, ID 25) |
| 5 | Control unit | |
| 6 | Power supply/communication wiring conduits | |
| 7 | Return air side | |
| 8 | Air outlet duct flange | |

### AM112*NMDEH/EU

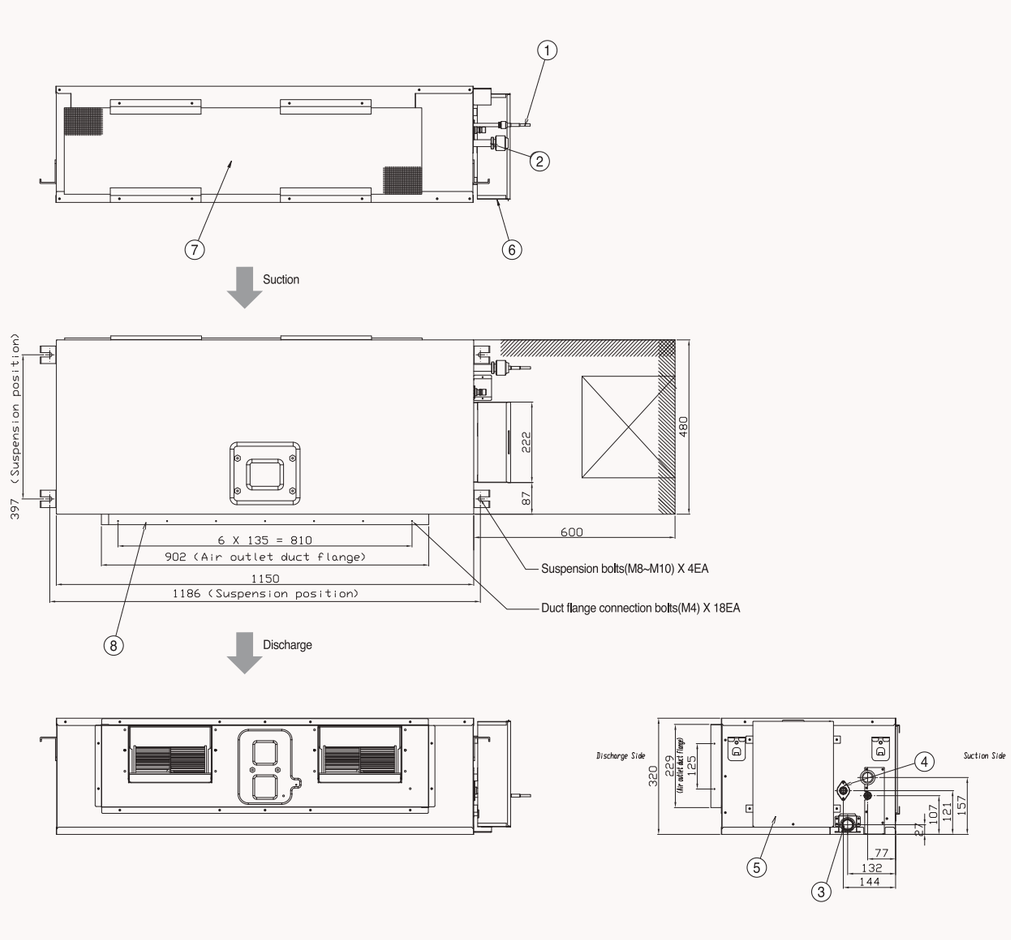


| NO | Name | Description |
|---|---|---|
| 1 | Liquid pipe connection | ø9.52 Flare |
| 2 | Gas pipe connection | ø15.88 Flare |
| 3 | Drain pipe connection without drain pump | VP25 (OD 32, ID 25) |
| 4 | Drain pipe connection with drain pump | VP25 (OD 32, ID 25) |
| 5 | Control unit | - |
| 6 | Power supply/communication wiring conduits | - |
| 7 | Return air side | - |
| 8 | Air outlet duct flange | - |





VRF

# Dimensional drawings

## MSP Duct

AM128/140/160*NMDEH*EU

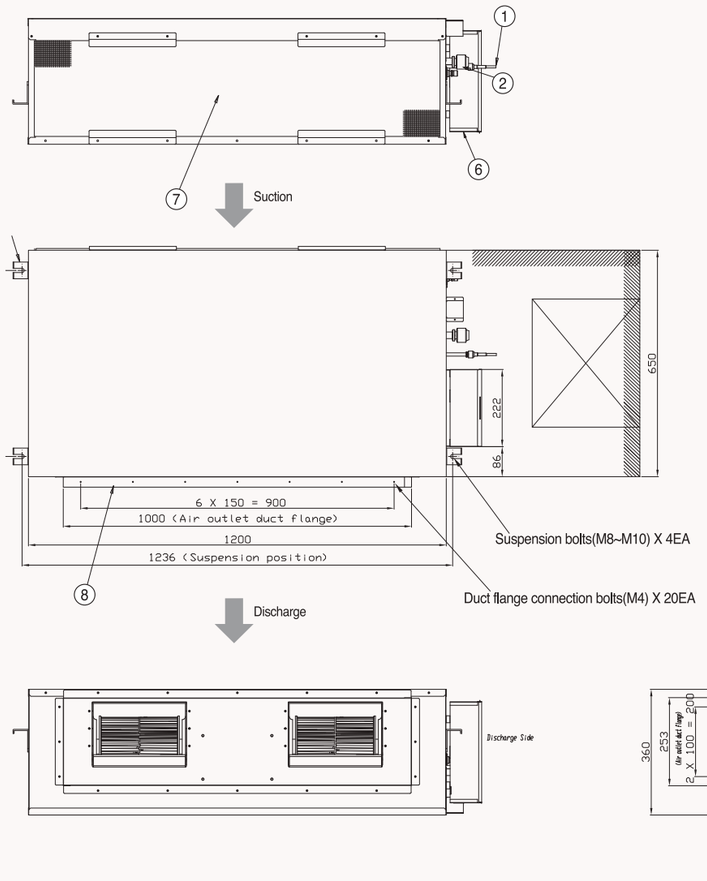


| NO | Name | Description |
|---|---|---|
| 1 | Liquid pipe connection | ø9.52 Flare |
| 2 | Gas pipe connection | ø15.88 Flare |
| 3 | Drain pipe connection without drain pump | VP25 (OD 32, ID 25) |
| 4 | Drain pipe connection with drain pump | VP25 (OD 32, ID 25) |
| 5 | Control unit | |
| 6 | Power supply/communication wiring conduits | |
| 7 | Return air side | |
| 8 | Air outlet duct flange | |

# Specifications

## HSP Duct

- Two-position field adjustable air return, on the bottom or at the rear of the unit.
- Equipped with two Sirocco fans direct driven by a single motor.
- Auto Restart function.
- Optional condensate drain pump.
- Long-life HD 40 permanent filter is included.



| Model | | | | AM112FNHDEH/EU | AM128FNHDEH/EU | AM140FNHDEH/EU |
|---|---|---|---|---|---|---|
| Power Supply | | | Φ, #, V, Hz | 1Φ, 2, 220~240 V, 50 Hz | 1Φ, 2, 220~240 V, 50 Hz | 1Φ, 2, 220~240 V, 50 Hz |
| Performance | Capacity (Nominal) | Cooling | kW | 11.2 | 12.8 | 14 |
| | | Heating | kW | 12.5 | 13.8 | 16.8 |
| Power | Power Input (Nominal) | Cooling | W | 510 | 560 | 625 |
| | | Heating | W | 510 | 560 | 625 |
| | Current Input (Nominal) | Cooling | A | 3.60 | 3.75 | 3.90 |
| | | Heating | A | 3.60 | 3.75 | 3.90 |
| Fan | Motor | Type | - | Sirocco Fan/AC | Sirocco Fan/AC | Sirocco Fan/AC |
| | | Output | W | - | - | - |
| | | Number of Fans | - | 2 | 2 | 2 |
| | Airflow Rate | H/M/L (UL) | $m^3$/min | 32/27/23 | 35/31/26 | 39/33/28 |
| | | | l/s | 533.33/450.00/383.33 | 583.33/516.67/466.67 | 650.00/550.00/466.67 |
| | External Static Pressure | Min/Std/Max | mmAq | 5.00/10.00/20.00 | 5.00/10.00/20.00 | 5.00/10.00/20.00 |
| | | | Pa | 49.00/98.10/196.10 | 49.00/98.10/196.10 | 49.00/98.10/196.10 |
| | | | WG | - | - | - |
| Piping Connections | Liquid Pipe | | ø, mm | 9.52 | 9.52 | 9.52 |
| | | | ø, inch | 3/8 | 3/8 | 3/8 |
| | Gas Pipe | | ø, mm | 15.88 | 15.88 | 15.88 |
| | | | ø, inch | 5/8 | 5/8 | 5/8 |
| | Drain Pipe | | ø, mm | VP25 (OD 32, ID 25) | VP25 (OD 32, ID 25) | VP25 (OD 32, ID 25) |
| Field Wiring | Power Source Wire | Below 20 m/ over 20 m | $mm^2$ | 1.5/2.5 | 1.5/2.5 | 1.5/2.5 |
| | Transmission Cable | | $mm^2$ | 0.75~1.50 | 0.75~1.50 | 0.75~1.50 |
| Refrigerant | Type | | - | R410A | R410A | R410A |
| | Control Method | | - | EEV | EEV | EEV |
| Sound [2] | Sound Pressure | (H/M/L) | dB(A) | 43/41/39 | 45/43/42 | 46/45/44 |
| Dimensions | Net Weight | | kg | 57.0 | 57.0 | 57.0 |
| | Net Dimensions (W x H x D) | | mm | 1,200 x 360 x 650 | 1,200 x 360 x 650 | 1,200 x 360 x 650 |
| Additional Accessories | Drain Pump | Drain Pump | - | Optional/MDP-M075SGU2D | Optional/MDP-M075SGU2D | Optional/MDP-M075SGU2D |
| | | Max. Lifting Height/ Displacement | mm / litres/h | 750/24 | 750/24 | 750/24 |
| | Air Filter | | - | Long-life Filter | Long-life Filter | Long-life Filter |



| AM220FNHDEH/EU | AM280FNHDEH/EU |
|---|---|
| 1Φ, 2, 220~240 V, 50 Hz | 1Φ, 2, 220~240 V, 50 Hz |
| 22.4 | 28 |
| 25.0 | 31.5 |
| 530 | 790 |
| 530 | 790 |
| 3.80 | 5.90 |
| 3.80 | 5.90 |
| Sirocco Fan | Sirocco Fan |
| 400 | 400 |
| 1 | 1 |
| 58/52/47 | 72/65/58 |
| 966.67/866.67/783.33 | 1,200.00/1,083.33/966.67 |
| 5.00/15.00/25.00 | 5.00/15.00/28.00 |
| 49.03/147.10/245.17 | 49.03/147.10/274.59 |
| - | - |
| 9.52 | 9.52 |
| 3/8 | 3/8 |
| 19.05 | 22.23 |
| 3/4 | 3/4 |
| VP25 (OD 32, ID 25) | VP25 (OD 32, ID 25) |
| 1.5/2.5 | 1.5/2.5 |
| 0.75~1.50 | 0.75~1.50 |
| R410A | R410A |
| EEV INCLUDED | EEV INCLUDED |
| 45/43/41 | 48/46/43 |
| 89.0 | 89.0 |
| 1,240 x 470 x 1,040 | 1,240 x 470 x 1,040 |
| MDP-N047SNC1D | MDP-N047SNC1D |
| 750/24 | 750/24 |
| - | - |

### Accessories











| Drain Pump (optional) | Drain Pump (optional) | Wireless Remote Controller | Touch Controller | Wired Remote Controller | Wired Remote Controller | Wi-Fi Kit | Wireless Receiver Kit | External Thermostat |
|---|---|---|---|---|---|---|---|---|
| MDP-M075SGU2D | MDP-M075SGU1D | AR-EH03E (to be matched with MRK-A10N) | MWR-SH11N | MWR-WE13N | MWR-WG00*N | MIM-H04EN | MRK-A10N (to be matched with AR-EH03E) | MRW-TA |





VRF

# Dimensional drawings

## HSP Duct

### AM112/128/140FNHDEH***

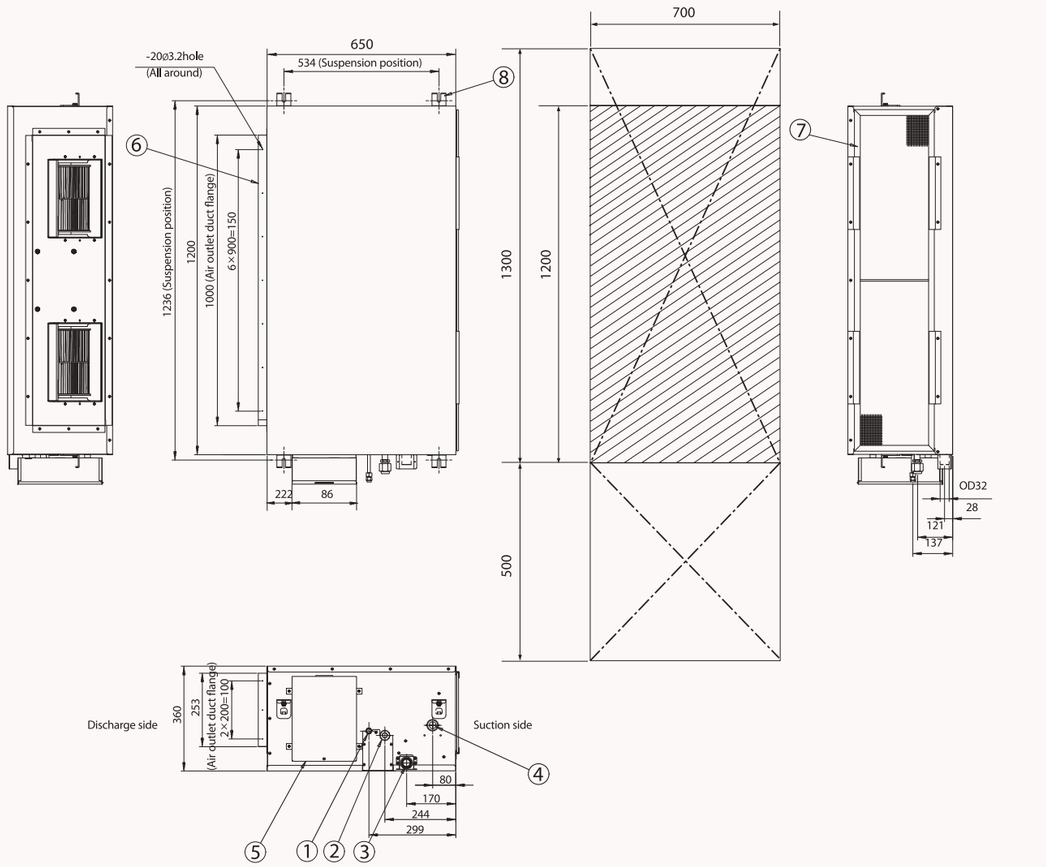


| NO | Name | Description |
|---|---|---|
| 1 | Liquid pipe connection | ø9.52 (3/8) |
| 2 | Gas pipe connection | ø15.88 (5/8) |
| 3 | Drain pipe connection without optional drain pump kits | VP25 (OD 32, ID 25) |
| 4 | Drain pipe connection with optional drain pump kits | VP25 (OD 32, ID 25) |
| 5 | Power supply/communication wiring conduits | |
| 6 | Air discharge grille flange | |
| 7 | Suction flange | |
| 8 | Hook | 3/8 or M10 |

### AM220/280FNHDEH***

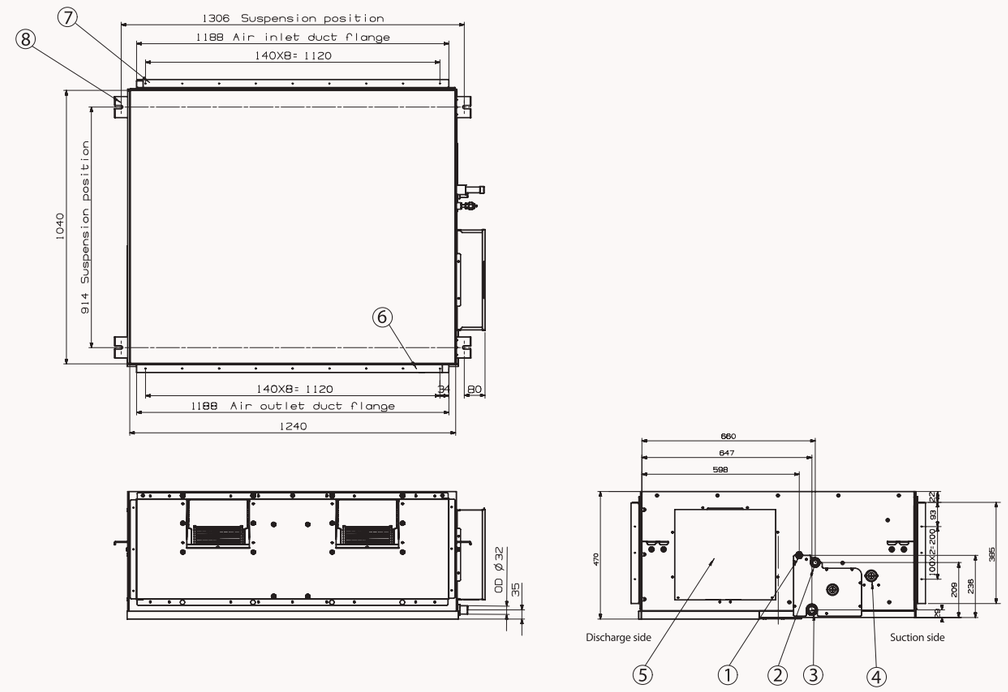


| NO | Name | Description |
|---|---|---|
| 1 | Liquid pipe connection | ø9.52 (3/8) |
| 2 | Gas pipe connection | AM220***: ø19.05 (3/4), AM280***: ø22.22 (7/8) |
| 3 | Drain pipe connection without optional drain pump kits | VP25 (OD 32, ID 25) |
| 4 | Drain pipe connection with optional drain pump kits | VP25 (OD 32, ID 25) |
| 5 | Power supply/communication wiring conduits | |
| 6 | Air discharge grille flange | |
| 7 | Suction flange | |
| 8 | Hook | 3/8 or M10 |

# Specifications

## Big Duct

- Two-position field adjustable air return, on the bottom or at the rear of the unit.
- Equipped with two Sirocco fans direct driven by a single motor.
- Auto Restart function.
- Optional condensate drain pump.
- Long-life HD 40 permanent filter is included.



| Model | | | | AM180JNHFKH/EU | AM224JNHFKH/EU |
|---|---|---|---|---|---|
| Power Supply | | | Φ, #, V, Hz | 1Φ, 2, 220~240 V, 50 Hz | 1Φ, 2, 220~240 V, 50 Hz |
| Performance | Capacity (Nominal) | Cooling | kW | 18 | 22.4 |
| | | Heating | kW | 20 | 25 |
| Power | Power Input (Nominal) | Cooling | W | 340 | 530 |
| | | Heating | W | 340 | 530 |
| | Current Input (Nominal) | Cooling | A | 1.90 | 2.90 |
| | | Heating | A | 1.90 | 2.90 |
| Fan | Motor | Type | - | Sirocco Fan | Sirocco Fan |
| | Airflow Rate | Output x n | W | 630 x 1 | 630 x 1 |
| | | H/M/L (UL) | $m^3$/min | 58.00/50.00/43.00 | 72.00/61.00/50.00 |
| | | | l/s | 966.67/833.33/716.67 | 1,200.00/1,016.67/833.33 |
| | External Static Pressure | Min/Std/Max | mmAq | 5.00/7.34/20.00 | 5.00/7.34/20.00 |
| | | | Pa | 49.00/71.93/196.00 | 49.00/71.93/196.00 |
| Piping Connections | Liquid Pipe | | ø, mm | 9.52 | 9.52 |
| | | | ø, inch | 3/8 | 3/8 |
| | Gas Pipe | | ø, mm | 19.05 | 19.05 |
| | | | ø, inch | 3/4 | 3/4 |
| | Drain Pipe | | ø, mm | VP25 (OD 25, ID 20) | VP25 (OD 25, ID 20) |
| Field Wiring | Power Source Wire | | $mm^2$ | - | - |
| | Transmission Cable | | $mm^2$ | 0.75~1.50 | 0.75~1.50 |
| Refrigerant | Type | | - | R410A | R410A |
| | Control Method | | - | EEV(O) | EEV(O) |
| Sound [2] | Sound Pressure | (H/M/L) | dB(A) | 43/39/35 | 44/40/36 |
| Dimensions | Net Weight | | kg | 82.5 | 82.5 |
| | Net Dimensions (W x H x D) | | mm | 1,350 x 450 x 910 | 1,350 x 450 x 910 |
| Additional Accessories | Drain Pump | Internal | - | MDP-G075SP | MDP-G075SP |
| | | External | - | MDP-G075SQ | MDP-G075SQ |

### Accessories











| External Drain Pump | Built-in Drain Pump | Wireless Remote Controller | Touch Controller | Wired Remote Controller | Wired Remote Controller | Wi-Fi Kit | Wireless Receiver Kit | External Thermostat |
|---|---|---|---|---|---|---|---|---|
| MDP-G075SP | MDP-G075SQ | AR-EH03E (to be matched with MRK-A10N) | MWR-SH11N | MWR-WE13N | MWR-WG00*N | MIM-H04EN | MRK-A10N (to be matched with AR-EH03E) | MRW-TA |



# Dimensional drawings

## Big Duct

AM180JNHFKH/EU, AM224JNHFKH/EU

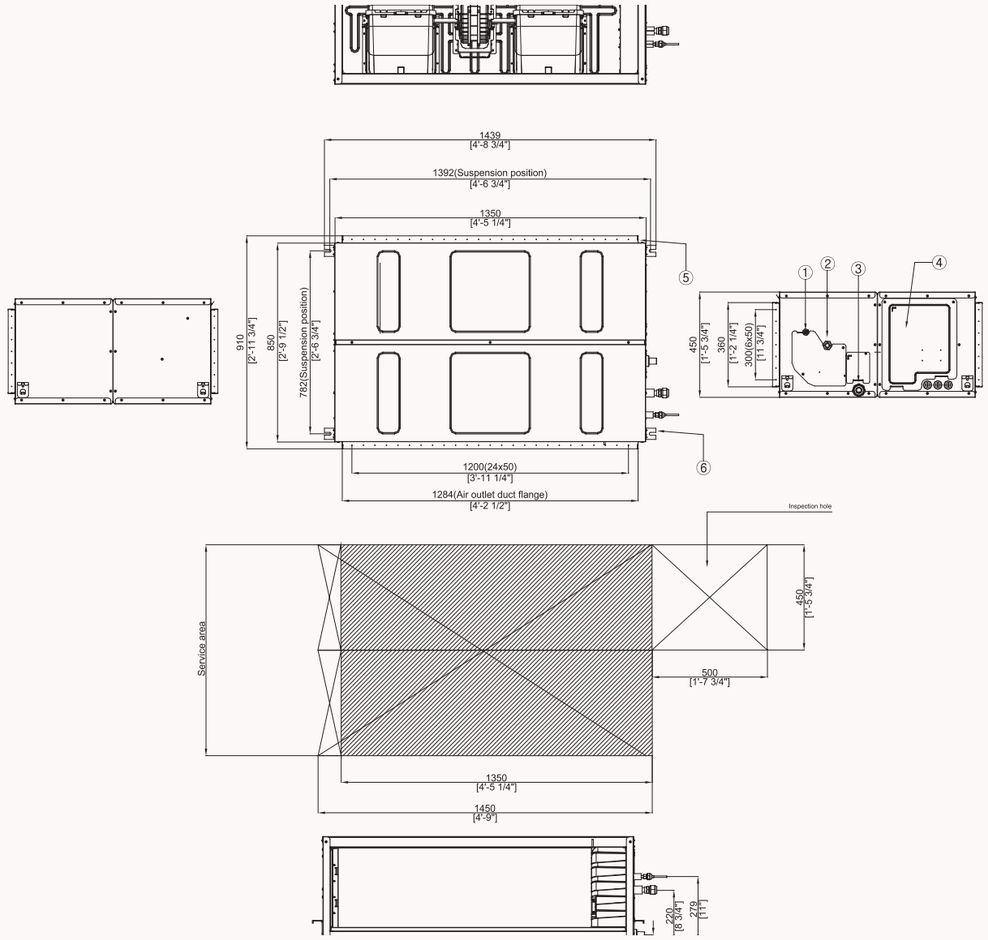


| NO | Name |
|---|---|
| 1 | Liquid pipe connection |
| 2 | Gas pipe connection |
| 3 | Drain pipe connection |
| 4 | Power wiring conduits |
| 5 | Air discharge flange |
| 6 | Hook |

# Specifications

## Console

- SPi Ioniser for air purification included as standard.
- Slim design: only 100 mm in width.
- Turbo fan with single-phase inverter motor.
- Two separate air outlets to avoid stratification.
- Long-life washable permanent filter.
- Compatible with Wi-Fi Kit controller.
- Auto Restart function.



| Model | | | | AM022KNJDEH/EU | AM028FNJDEH/EU | AM036FNJDEH/EU | AM045KNJDEH/EU | AM056FNJDEH/EU |
|---|---|---|---|---|---|---|---|---|
| Power Supply | | | Φ, #, V, Hz | 1Φ, 2, 220~240 V, 50 Hz | 1Φ, 2, 220~240 V, 50 Hz | 1Φ, 2, 220~240 V, 50 Hz | 1Φ, 2, 220~240 V, 50 Hz | 1Φ, 2, 220~240 V, 50 Hz |
| Performance | Capacity (Nominal) | Cooling | kW | 2.2 | 2.8 | 3.6 | 4.5 | 5.6 |
| | | Heating | | 2.5 | 3.2 | 4 | 5 | 6.3 |
| Power | Power Input (Nominal) | Cooling | W | 16 | 30 | 35 | 36 | 62 |
| | | Heating | | 16 | 30 | 35 | 36 | 62 |
| | Current Input (Nominal) | Cooling | A | 0.13 | 0.25 | 0.29 | 0.30 | 0.49 |
| | | Heating | | 0.13 | 0.25 | 0.29 | 0.30 | 0.49 |
| Fan | Motor | Type | - | Turbo Fan | Turbo Fan | Turbo Fan | Turbo Fan | Turbo Fan |
| | | Output x n | w | 37 x 1 | 37 | 37 | 37 x 1 | 37 |
| | | Number of Fans | - | - | 1 | 1 | - | 1 |
| | Airflow Rate | H/M/L (UL) | $m^3$/min | 6.30/5.40/4.90 | 7.00/6.00/5.00 | 8.50/7.50/6.50 | 11.30/9.80/8.20 | 13.00/11.50/10.00 |
| | | | l/s | 105.00/90.00/81.67 | 116.67/100.00/83.33 | 141.67/125.00/108.33 | 188.33/163.33/136.67 | 216.67/191.67/166.67 |
| Piping Connections | Liquid Pipe | | ø, mm | 6.35 | 6.35 | 6.35 | 6.35 | 6.35 |
| | | | ø, inch | 1/4 | 1/4 | 1/4 | 1/4 | 1/4 |
| | Gas Pipe | | ø, mm | 12.7 | 12.7 | 12.7 | 12.7 | 12.7 |
| | | | ø, inch | 1/2 | 1/2 | 1/2 | 1/2 | 1/2 |
| | Drain Pipe | | ø, mm | ID 18 HOSE | ID 18 HOSE | ID 18 HOSE | ID 18 HOSE | ID 18 HOSE |
| Field Wiring | Power Source Wire | | $mm^2$ | 1.5~2.5 | 1.5/2.5 | 1.5/2.5 | 1.5~2.5 | 1.5/2.5 |
| | Transmission Cable | | $mm^2$ | 0.75~1.50 | 0.75~1.50 | 0.75~1.50 | 0.75~1.50 | 0.75~1.50 |
| Refrigerant | Type | | - | R410A | R410A | R410A | R410A | R410A |
| | Control Method | | - | EEV INCLUDED | EEV INCLUDED | EEV INCLUDED | EEV INCLUDED | EEV INCLUDED |
| Sound [2] | Pressure | (H/M/L) | dB(A) | 34/32/30 | 38/36/34 | 39/37/34 | 42/39/36 | 43/40/37 |
| | Power | Cooling | | 52 | 58 | 59 | 63 | 64 |
| Dimensions | Net Weight | | kg | 15.5 | 16.0 | 16.0 | 16.0 | 16.0 |
| | Net Dimensions (W x H x D) | | mm | 720 x 620 x 199 | 720 x 620 x 199 | 720 x 620 x 199 | 720 x 620 x 199 | 720 x 620 x 199 |
| Additional Accessories | Air Filter | | - | - | Long-life Filter | Long-life Filter | - | Long-life Filter |

**Accessories**







| Touch Controller | Wired Remote Controller | Wired Remote Controller | Wi-Fi Kit | External Thermostat |
|---|---|---|---|---|
| MWR-SH11N | MWR-WE13N | MWR-WG00*N | MIM-H04EN | MRW-TA |





# Dimensional drawings

## Console

**AM022/045KNJDEH/EU, AM028/036FNJDEH/EU**

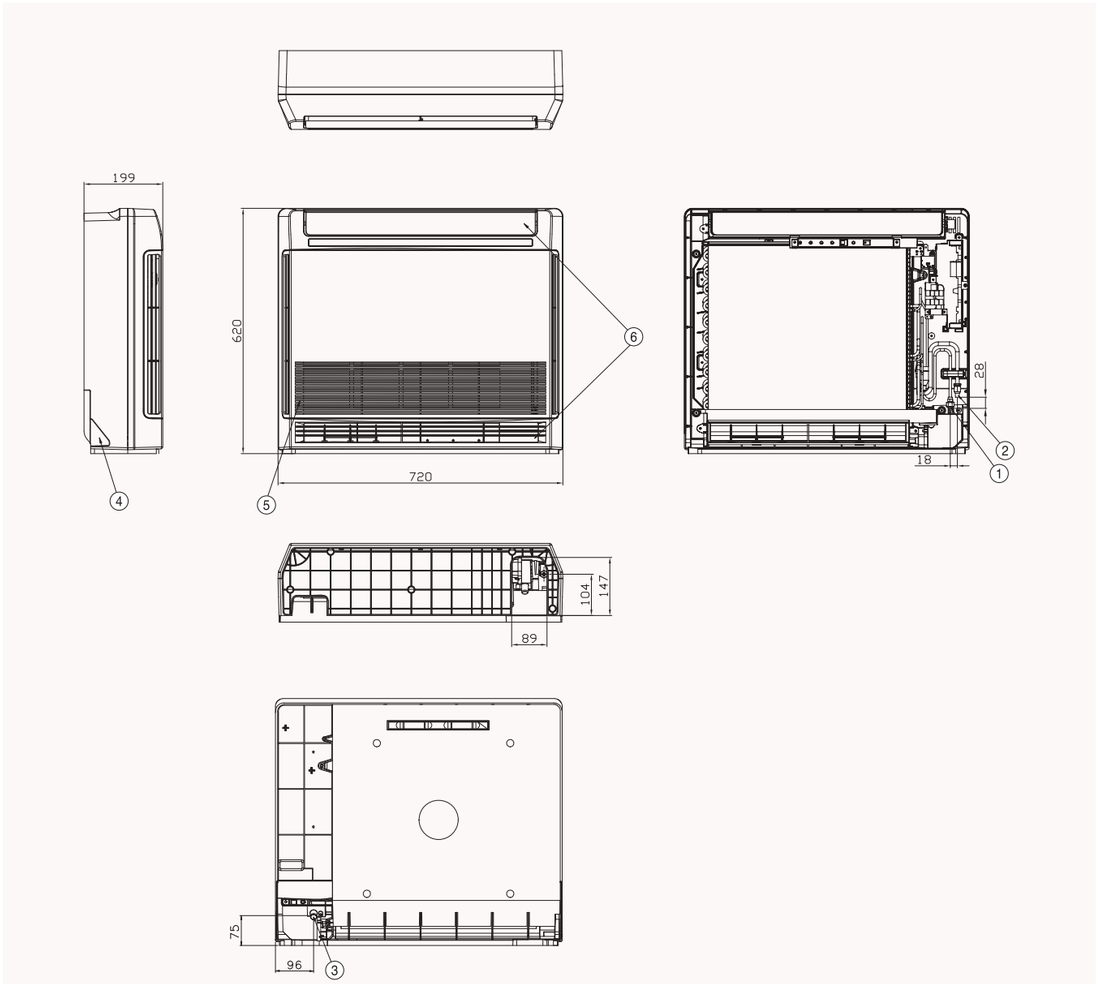


| NO | Name | Description |
|---|---|---|
| 1 | Liquid pipe connection | ø6.35 Flare |
| 2 | Gas pipe connection | ø12.70 Flare |
| 3 | Drain pipe connection | ID 18 Hose |
| 4 | Power supply/communication wiring conduits | |
| 5 | Air inlet grille | |
| 6 | Air outlet louvre | |

# Dimensional drawings

## Console

AM056FNJDEH/EU

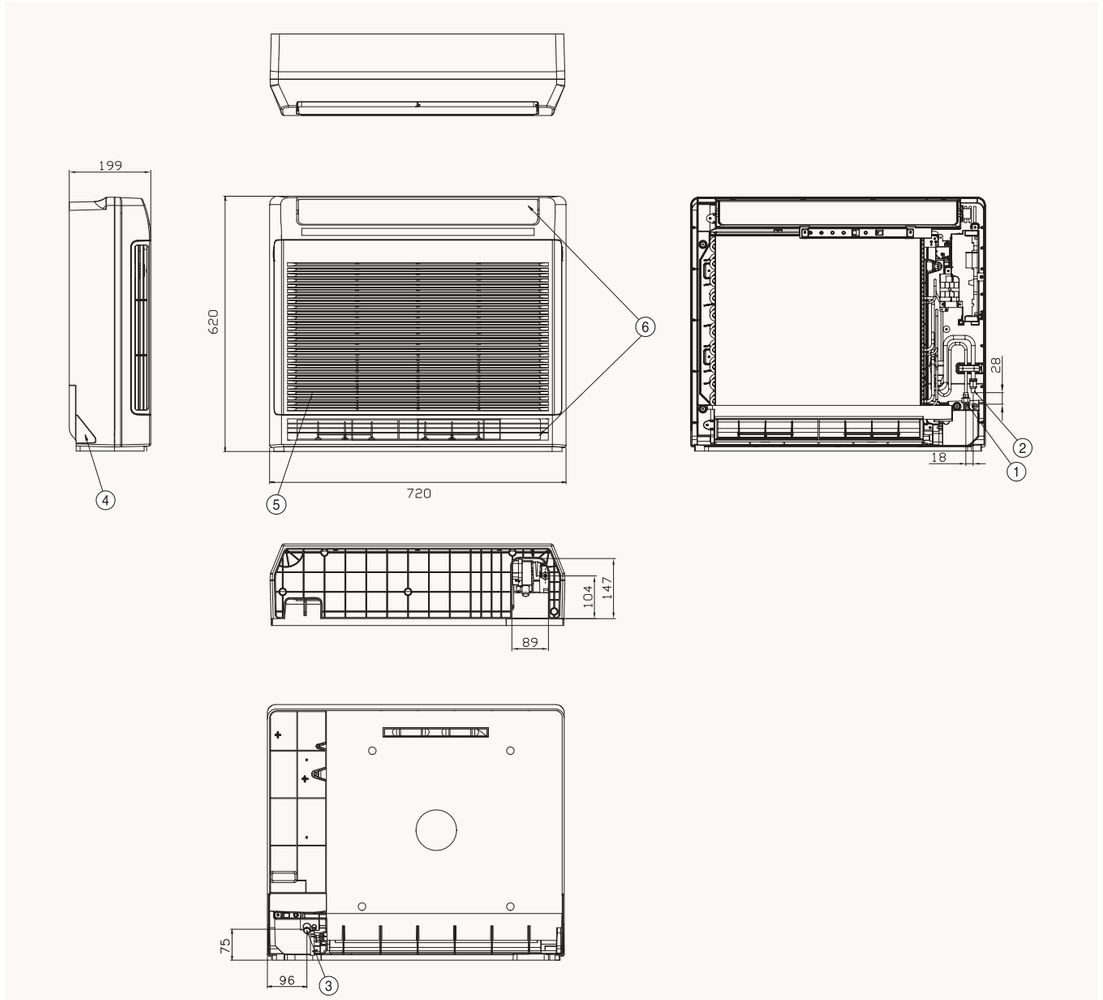


| NO | Name | Description |
|---|---|---|
| 1 | Liquid pipe connection | ø6.35 Flare |
| 2 | Gas pipe connection | ø12.70 Flare |
| 3 | Drain pipe connection | ID 18 Hose |
| 4 | Power supply/communication wiring conduits | |
| 5 | Air inlet grille | |
| 6 | Air outlet louvre | |



VRF

# Specifications

## Floor/Ceiling

- Optional vertical or horizontal installation.
- Air supply by means of one adjustable blade.
- Reduced noise thanks to the remotely controlled optional EEV.
- Sirocco Fan direct driven by a single motor.
- Long-life washable HD 40 permanent filter is included.
- Compatible with Wi-Fi Kit controller.




| Model | | | | AM056FNCDEH/EU | AM071FNCDEH/EU |
|---|---|---|---|---|---|
| Power Supply | | | Φ, #, V, Hz | 1Φ, 2, 220~240 V, 50 Hz | 1Φ, 2, 220~240 V, 50 Hz |
| Performance | Capacity (Nominal) | Cooling | kW | 5.6 | 7.1 |
| | | Heating | | 6.3 | 8.0 |
| Power | Power Input (Nominal) | Cooling | | 72 | 80 |
| | | Heating | W | 72 | 77 |
| | Current Input (Nominal) | Cooling | | 0.33 | 0.35 |
| | | Heating | A | 0.28 | 0.29 |
| Fan | Motor | Type | - | Sirocco Fan | Sirocco Fan |
| | | Output | W | 60 | 120 |
| | | Number of Fans | - | 1 | 1 |
| | Airflow Rate | H/M/L (UL) | $m^3$/min | 14.00/13.00/12.00 | 18.00/16.50/15.00 |
| | | | l/s | 233.33/216.67/200.00 | 300.00/275.00/250.00 |
| Piping Connections | Liquid Pipe | | ø, mm | 6.35 | 9.52 |
| | | | ø, inch | 1/4 | 3/8 |
| | Gas Pipe | | ø, mm | 12.70 | 15.88 |
| | | | ø, inch | 1/2 | 5/8 |
| | Drain Pipe | | ø, mm | ID 18 HOSE | ID 18 HOSE |
| Field Wiring | Power Source Wire | Below 20 m/over 20 m | $mm^2$ | 1.5/2.5 | 1.5/2.5 |
| | Transmission Cable | | $mm^2$ | 0.75~1.50 | 0.75~1.50 |
| Refrigerant | Type | | - | R410A | R410A |
| | Control Method | | - | EEV NOT INCLUDED | EEV NOT INCLUDED |
| Sound [2] | Sound Pressure | (H/M/L) | dB(A) | 40/37/34 | 44/42/40 |
| Dimensions | Net Weight | | kg | 21.0 | 21.0 |
| | Net Dimensions (W × H × D) | | mm | 1,000 x 650 x 200 | 1,000 x 650 x 200 |
| Additional Accessories | Air Filter | | - | Long-life Filter | Long-life Filter |

### Accessories







| Touch Controller | Wired Remote Controller | Wired Remote Controller | Wi-Fi Kit | External Thermostat |
|---|---|---|---|---|
| MWR-SH11N | MWR-WE13N | MWR-WG00*N | MIM-H04EN | MRW-TA |



# Dimensional drawings

## Floor/Ceiling

AM***FNCDEH/EU

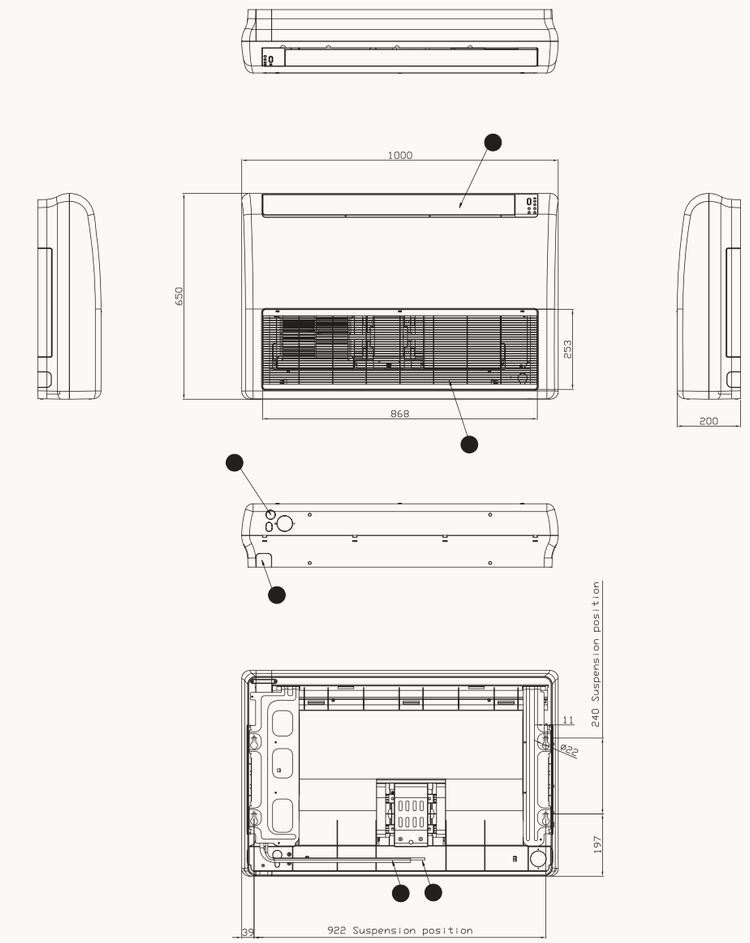


| NO | Name | Description | |
|---|---|---|---|
| | | 5.6 kW | 7.1 kW |
| 1 | Liquid pipe connection | ø6.35 Flare | ø9.52 Flare |
| 2 | Gas pipe connection | ø12.70 Flare | ø15.88 Flare |
| 3 | Drain pipe connection | ID 18 Hose | |
| 4 | Power supply/communication wiring conduits | | |
| 5 | Air inlet grille | | |
| 6 | Air outlet louvre | | |

# Specifications

## Big Ceiling

- Horizontal installation only.
- Air supply by means of one adjustable blade.
- Sirocco Fan direct driven by a single motor.
- Long-life washable HD 40 permanent filter is included.
- Compatible with Wi-Fi Kit controller.



| Model | | | | AM112JNCDKH/EU | AM140JNCDKH/EU |
|---|---|---|---|---|---|
| Power Supply | | | Φ, #, V, Hz | 1Φ, 2, 220~240 V, 50 Hz | 1Φ, 2, 220~240 V, 50 Hz |
| Performance | Capacity (Nominal) | Cooling | kW | 11.2 | 14.0 |
| | | Heating | | 12.5 | 16.0 |
| Power | Power Input (Nominal) | Cooling | W | 92.0 | 160.0 |
| | | Heating | | 80.0 | 160.0 |
| | Current Input (Nominal) | Cooling | A | 0.94 | 1.45 |
| | | Heating | | 0.83 | 1.45 |
| Fan | Motor | Type | - | Sirocco Fan | Sirocco Fan |
| | | Output | W | 260 x 1 | 260 x 1 |
| | Airflow Rate | H/M/L (UL) | $m^3$/min | 29.30/23.90/18.50 | 36.40/30.80/26.00 |
| | | | l/s | 488.33/398.33/308.33 | 606.67/513.33/433.33 |
| Piping Connections | Liquid Pipe | | ø, mm | 9.52 | 9.52 |
| | | | ø, inch | 3/8 | 3/8 |
| | Gas Pipe | | ø, mm | 15.88 | 15.88 |
| | | | ø, inch | 5/8 | 5/8 |
| | Drain Pipe | | ø, mm | VP25 (OD 25, ID 20) | VP25 (OD 25, ID 20) |
| Field Wiring | Power Source Wire | Below 20 m/over 20 m | $mm^2$ | 1.5/2.5 | 1.5/2.5 |
| | Transmission Cable | | $mm^2$ | 0.75~1.50 | 0.75~1.50 |
| Refrigerant | Type | | - | R410A | R410A |
| | Control Method | | - | EEV INCLUDED | EEV INCLUDED |
| Sound [2] | Sound Pressure | (H/M/L) | dB(A) | 45/41/37 | 46/43/38 |
| | Sound Power | Cooling | | 61 | 63 |
| Dimensions | Net Weight | | kg | 33.5 | 42.5 |
| | Net Dimensions (W × H × D) | | mm | 1,350 x 235 x 675 | 1,350 x 235 x 675 |

### Accessories







| Touch Controller | Wired Remote Controller | Wired Remote Controller | Wi-Fi Kit | External Thermostat |
|---|---|---|---|---|
| MWR-SH11N | MWR-WE13N | MWR-WG00*N | MIM-H04EN | MRW-TA |





# Dimensional drawings

## Big Ceiling

AM***JNCDKH/EU

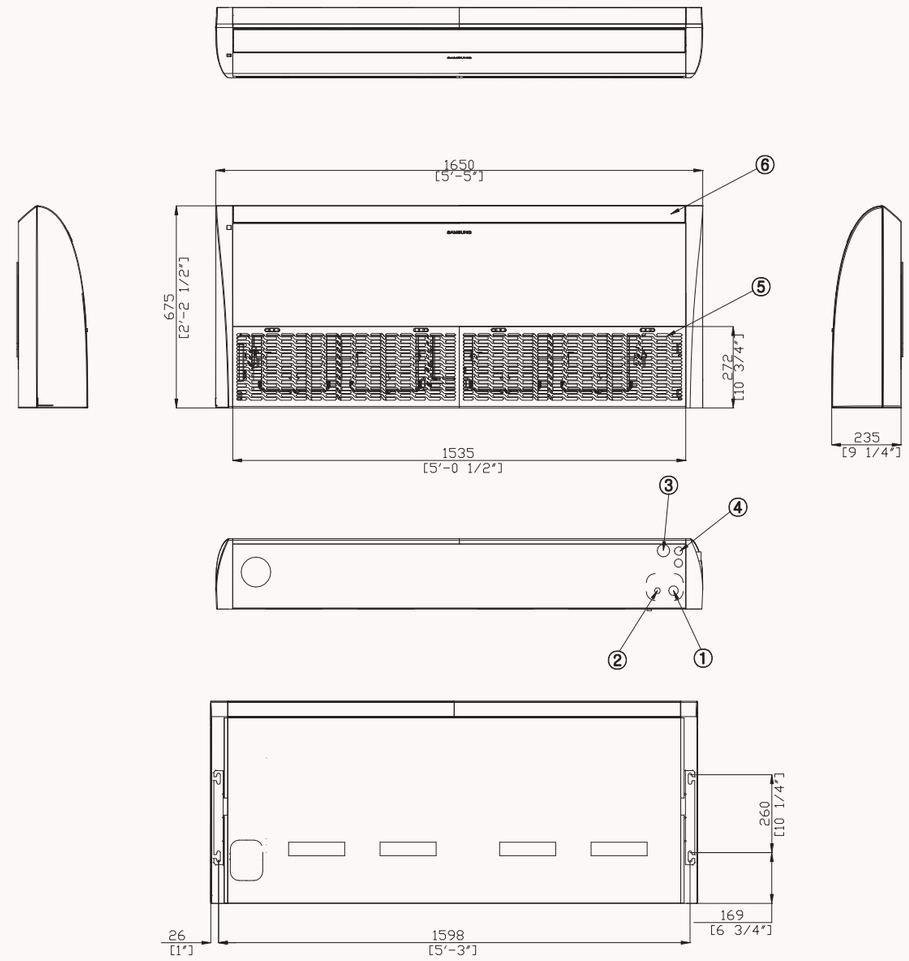


| NO | Name |
|---|---|
| 1 | Refrigerant gas pipe |
| 2 | Refrigerant liquid pipe |
| 3 | Condensate drain |
| 4 | Power supply/communication wiring conduits |
| 5 | Air inlet grille |
| 6 | Air outlet grille |

# Specifications

## Concealed Floor-Standing

- Silent operation.
- Sirocco fan driven by inverter motor.
- Compatible with Wi-Fi Kit controller.
- Long-life washable permanent filter.
- Auto Restart function.



| Model | | | | AM036FNFDEH/EU | AM056FNFDEH/EU | AM071FNFDEH/EU |
|---|---|---|---|---|---|---|
| Power Supply | | | Φ, #, V, Hz | 1Φ, 2, 220~240 V, 50 Hz | 1Φ, 2, 220~240 V, 50 Hz | 1Φ, 2, 220~240 V, 50 Hz |
| Performance | Capacity (Nominal) | Cooling | kW | 3.6 | 5.6 | 7.1 |
| | | Heating | | 4.0 | 6.3 | 8.0 |
| Power | Power Input (Nominal) | Cooling | W | 50 | 110 | 110 |
| | | Heating | | 50 | 110 | 110 |
| | Current Input (Nominal) | Cooling | A | 0.24 | 0.53 | 0.53 |
| | | Heating | | 0.24 | 0.53 | 0.53 |
| Fan | Motor | Type | - | Sirocco Fan | Sirocco Fan | Sirocco Fan |
| | Airflow Rate | H/M/L (UL) | m³/min | 10.00/8.50/6.00 | 15.50/14.00/11.00 | 15.50/14.00/11.00 |
| | | | L/s | 166.67/141.67/100.00 | 258.33/233.33/183.33 | 258.33/233.33/183.33 |
| Piping Connections | Liquid Pipe | | ø, mm | 6.35 | 9.52 | 9.52 |
| | | | ø, inch | 1/4 | 3/8 | 3/8 |
| | Gas Pipe | | ø, mm | 12.70 | 15.88 | 15.88 |
| | | | ø, inch | 1/2 | 5/8 | 5/8 |
| | Drain Pipe | | ø, mm | ID 18 HOSE | ID 18 HOSE | ID 18 HOSE |
| Field Wiring | Power Source Wire | Below 20 m/ over 20 m | mm² | 1.5/2.5 | 1.5/2.5 | 1.5/2.5 |
| | Transmission Cable | | mm² | 0.75~1.50 | 0.75~1.50 | 0.75~1.50 |
| Refrigerant | Type | | - | R410A | R410A | R410A |
| | Control Method | | - | EEV INCLUDED | EEV INCLUDED | EEV INCLUDED |
| Sound [2] | Sound Pressure | (H/M/L) | dB(A) | 37/32/27 | 40/36/32 | 40/36/32 |
| Dimensions | Net Weight | | kg | 23.0 | 28.5 | 28.5 |
| | Net Dimensions (W × H × D) | | mm | 945 x 600 x 220 | 1,225 x 600 x 220 | 1,225 x 600 x 220 |
| Additional Accessories | Air Filter | | - | Long-life Filter | Long-life Filter | Long-life Filter |

**Accessories**







| Touch Controller | Wired Remote Controller | Wired Remote Controller | Wi-Fi Kit | External Thermostat |
|---|---|---|---|---|
| MWR-SH11N | MWR-WE13N | MWR-WG00*N | MIM-H04EN | MRW-TA |





# Dimensional drawings

## Concealed Floor-Standing

**AM036/056/071FNFDEH/****

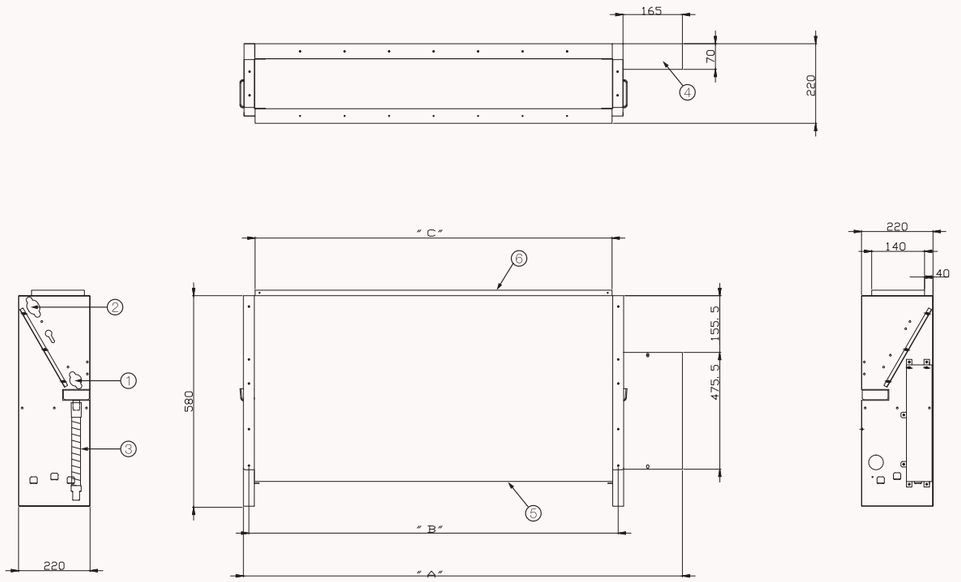


| Model | A | B | C |
|---|---|---|---|
| AM036FNFDEH/EU | 945 | 730 | 700 |
| AM056/071FNFDEH/EU | 1,225 | 1,010 | 980 |

| NO | Name | Description | | |
|---|---|---|---|---|
| | | 3.6 kW | 5.6 kW | 7.1 kW |
| 1 | Liquid pipe connection | ø6.35 Flare | ø6.35 Flare | ø9.52 Flare |
| 2 | Gas pipe connection | ø12.70 Flare | ø12.70 Flare | ø15.88 Flare |
| 3 | Drain pipe connection | | ID 18 Hose | |
| 4 | Power supply/communication wiring conduits | | | |
| 5 | Air inlet grille | | | |
| 6 | Air outlet louvre | | | |

# Specifications

## Concealed Floor-Standing High Static Pressure

- Silent operation.
- Sirocco fan driven by inverter motor.
- Compatible with Wi-Fi Kit controller.
- Long-life washable permanent filter.
- Auto Restart function.



| Model | | | | AM036MNFDEH/EU | AM056MNFDEH/EU | AM071MNFDEH/EU |
|---|---|---|---|---|---|---|
| Power Supply | | | Φ, #, V, Hz | 1Φ, 2, 220~240 V, 50 Hz | 1Φ, 2, 220~240 V, 50 Hz | 1Φ, 2, 220~240 V, 50 Hz |
| Performance | Capacity (Nominal) | Cooling | kW | 3.6 | 5.6 | 7.1 |
| | | Heating | kW | 4.0 | 6.3 | 8.0 |
| Power | Power Input (Nominal) | Cooling | kW | 0.022 | 0.042 | 0.042 |
| | | Heating | kW | 0.022 | 0.042 | 0.042 |
| | Current Input (Nominal) | Cooling | A | 0.20 | 0.37 | 0.37 |
| | | Heating | A | 0.20 | 0.37 | 0.37 |
| Fan | Motor | Type | - | Sirocco Fan | Sirocco Fan | Sirocco Fan |
| | | Output x n | W | 100 x 1 | 100 x 1 | 100 x 1 |
| | External Static Pressure | Min/Std/Max | mmAq | 0.00/3.00/6.00 | 0.00/3.00/6.00 | 0.00/3.00/6.00 |
| | | Min/Std/Max | Pa | 0.00/29.40/58.90 | 0.00/29.40/58.90 | 0.00/29.40/58.90 |
| | Airflow Rate | (H/M/L) | $m^3/h$ | 600/510/360 | 930/840/660 | 930/840/660 |
| Piping Connections | Liquid Pipe | | ø, mm | 6.35 | 6.35 | 9.52 |
| | | | ø, inch | 1/4 | 1/4 | 3/8 |
| | Gas Pipe | | ø, mm | 12.70 | 12.70 | 15.88 |
| | | | ø, inch | 1/2 | 1/2 | 5/8 |
| | Drain Pipe | | ø, mm | ID 18 HOSE | ID 18 HOSE | ID 18 HOSE |
| Field Wiring | Power Source Wire | | $mm^2$ | 1.5~2.5 | 1.5~2.5 | 1.5~2.5 |
| | Transmission Cable | | $mm^2$ | 0.75~1.50 | 0.75~1.50 | 0.75~1.50 |
| Refrigerant | Type | | - | R410A | R410A | R410A |
| | GWP | | - | 2.088 | 2.088 | 2.088 |
| | Control Method | | - | EEV INCLUDED | EEV INCLUDED | EEV INCLUDED |
| Sound [2] | Sound Pressure | (H/M/L) | dB(A) | 37/32/27 | 40/36/32 | 40/36/32 |
| | Sound Power | | dB(A) | 53.0 | 59.0 | 59.0 |
| Dimensions | Net Weight | | kg | 22.0 | 27.0 | 27.0 |
| | Net Dimensions (W x H x D) | | mm | 945 x 600 x 220 | 1,225 x 600 x 220 | 1,225 x 600 x 220 |
| Additional Accessories | Air Filter | | - | Long-life Filter | Long-life Filter | Long-life Filter |

Accessories







| Touch Controller | Wired Remote Controller | Wired Remote Controller | Wi-Fi Kit | External Thermostat |
|---|---|---|---|---|
| MWR-SH11N | MWR-WE13N | MWR-WG00*N | MIM-H04EN | MRW-TA |





# Dimensional drawings

## Concealed Floor-Standing High Static Pressure

AM036/056/071FNFDEH/**

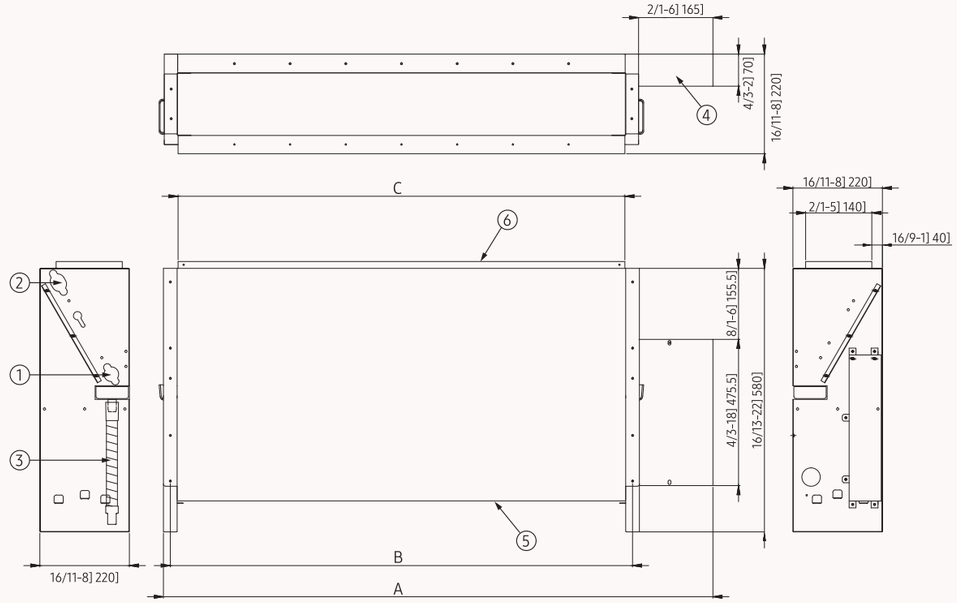


| Model | A | B | C |
|---|---|---|---|
| AM036MNFDEH/EU | 945 | 730 | 700 |
| AM056/071MNFDEH/EU | 1,225 | 1,010 | 980 |

| NO | Name | Description | | |
|---|---|---|---|---|
| | | 3.6 kW | 5.6 kW | 7.1 kW |
| 1 | Liquid pipe connection | ø6.35 Flare | ø6.35 Flare | ø9.52 Flare |
| 2 | Gas pipe connection | ø12.70 Flare | ø12.70 Flare | ø15.88 Flare |
| 3 | Drain pipe connection | | ID 18 Hose | |
| 4 | Power supply/communication wiring conduits | | | |
| 5 | Air inlet grille | | | |
| 6 | Air outlet louvre | | | |

# Specifications

## Packaged Floor-Standing

- Sirocco fan driven by inverter motor.
- Compatible with Wi-Fi Kit controller.




| Model | | | | AM140RNPDKH/EU | AM280RNPDKH/EU |
|---|---|---|---|---|---|
| Power Supply | | | Φ, #, V, Hz | 1Φ, 2, 220~240 V, 50/60 Hz | 1Φ, 2, 220~240 V, 50 Hz |
| Performance | Capacity (Nominal) | Cooling | kW | 14 | 28 |
| | | Heating | | 16 | 31.5 |
| Power | Power Input (Nominal) | Cooling | W | 190 | 955 |
| | | Heating | | 190 | 955 |
| | Current Input (Nominal) | Cooling | A | 0.90 | 4.73 |
| | | Heating | | 0.90 | 4.73 |
| Fan | Motor | Type | - | Sirocco Fan | Sirocco Fan |
| | | Output x n | w | 154 x 1 | 700 x 1 |
| | Airflow Rate | H/M/L (UL) | m³/min | 35.00/30.50/27.50 | 70.00/60.00/50.00 |
| | | | l/s | 583.33/508.33/458.33 | 1,166.67/1,000.00/833.33 |
| Piping Connections | Liquid Pipe | | ø, mm | 9.52 | 9.52 |
| | | | ø, inch | 3/8 | 3/8 |
| | Gas Pipe | | ø, mm | 15.88 | 22.22 |
| | | | ø, inch | 5/8 | 7/8 |
| | Drain Pipe | | ø, mm | ID 18 HOSE | VP25 (OD 32, ID 25) |
| Field Wiring | Power Source Wire | | mm² | 2.5 | 2.5 |
| | Transmission Cable | | mm² | VCTF 0.75~1.50 | VCTF 0.75~1.50 |
| Refrigerant | Type | | - | R410A | R410A |
| | Control Method | | - | EEV INCLUDED | EEV INCLUDED |
| Sound [2] | Sound Pressure | (H/L) | dB(A) | 54/47 | 58/54 |
| | Sound Power | Cooling | | - | - |
| Dimension | Net Weight | | kg | 48.0 | 115.0 |
| | Net Dimensions (W x H x D) | | mm | 650 x 1,850 x 400 | 1,100 x 1,800 x 485 |

**Accessories**







| Touch Controller | Wired Remote Controller | Wired Remote Controller | Wi-Fi Kit | External Thermostat |
|---|---|---|---|---|
| MWR-SH11N | MWR-WE13N | MWR-WG00*N | MIM-H04EN | MRW-TA |



# Dimensional drawings

## Packaged Floor-Standing

**AM140RNPDKH/EU**

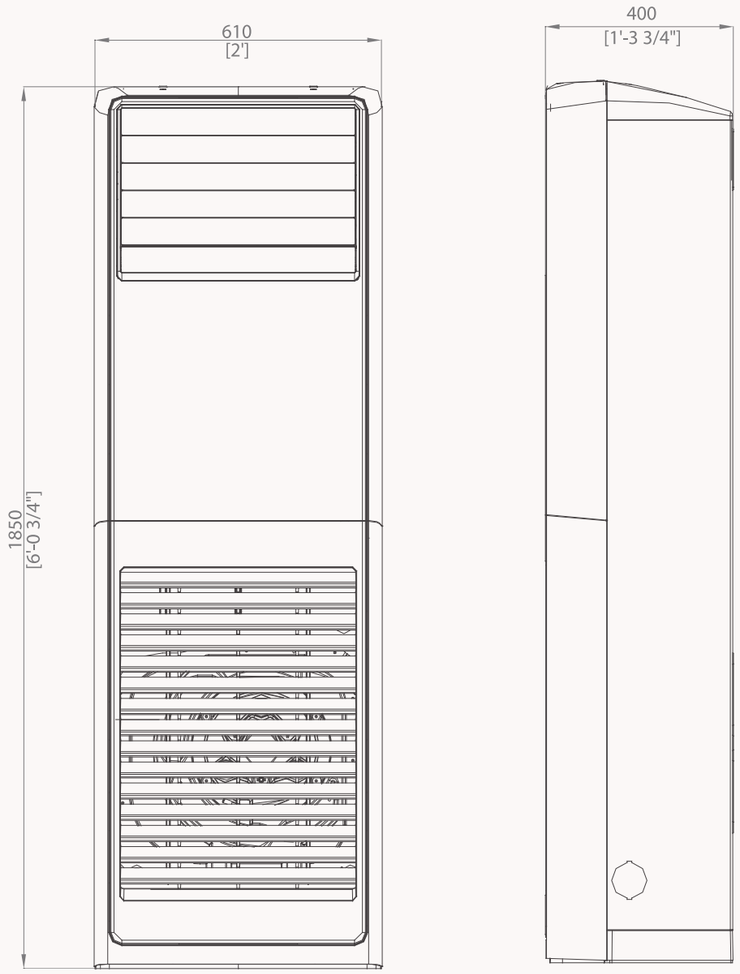


| NO | Name | Description |
|---|---|---|
| 1 | Gas piping refrigerant | ø15.88 (5/8) |
| 2 | Liquid piping refrigerant | ø9.52 (3/8) |
| 3 | Condensation drain piping | - |

# Dimensional drawings

## Packaged Floor-Standing

AM280RNPDKH/EU

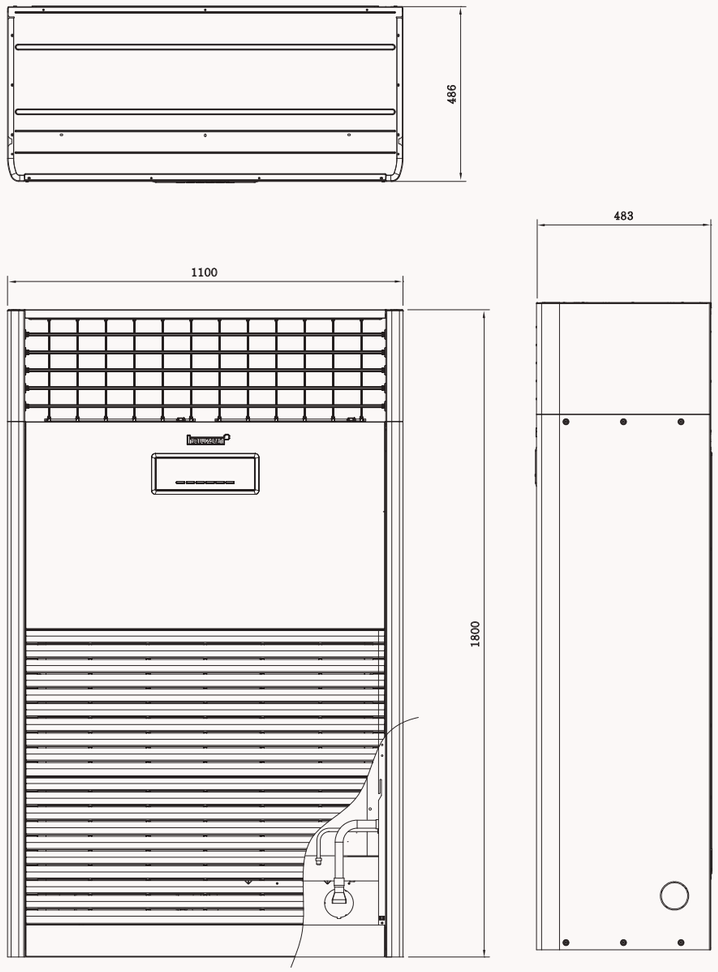


| NO | Name | Description |
|---|---|---|
| 1 | Refrigerant gas pipe | ø22.22 (7/8) Flare |
| 2 | Refrigerant liquid pipe | ø9.52 (3/8) Flare |
| 3 | Drain pipe connection | VP25 (OD 32, ID 25) |

# Specifications

## Boracay Wall-Mounted (EEV excluded)

- Motorised louvre provides an automatic change in airflow by directing the air up and down.
- Manual adjustable guide vane allows users to change the airflow from side to side (left to right).
- Turbo function provides fast and powerful cooling.
- Cross-flow fan direct driven by a single motor.
- Washable Full HD 80 filter.
- Four-direction drain and refrigerant piping connection as standard.





| Model | | | | AM015KNTDEH/EU | AM022KNTDEH/EU | AM028KNTDEH/EU | AM036KNTDEH/EU | AM045KNTDEH/EU | AM056KNTDEH/EU | AM071KNTDEH/EU |
|---|---|---|---|---|---|---|---|---|---|---|
| Power Supply | | | Φ, #, V, Hz | 1Φ, 2, 220~240 V, 50 Hz | 1Φ, 2, 220~240 V, 50 Hz | 1Φ, 2, 220~240 V, 50 Hz | 1Φ, 2, 220~240 V, 50 Hz | 1Φ, 2, 220~240 V, 50 Hz | 1Φ, 2, 220~240 V, 50 Hz | 1Φ, 2, 220~240 V, 50 Hz |
| Performance | | Cooling | kW | 1.5 | 2.2 | 2.8 | 3.6 | 4.5 | 5.6 | 6.8 |
| | | Heating | | 1.7 | 2.5 | 3.2 | 4.0 | 5.0 | 6.3 | 7.0 |
| Power | Power Input (Nominal) | Cooling | W | 32.0 | 32.0 | 38.0 | 42.0 | 47.0 | 48.0 | 51.0 |
| | | Heating | | 34.0 | 35.0 | 39.0 | 42.0 | 47.0 | 48.0 | 53.0 |
| | Current Input (Nominal) | Cooling | A | 0.20 | 0.20 | 0.22 | 0.23 | 0.27 | 0.27 | 0.28 |
| | | Heating | | 0.20 | 0.20 | 0.22 | 0.23 | 0.27 | 0.27 | 0.28 |
| | MCA | | | 0.3 | 0.3 | 0.4 | 0.4 | 0.4 | 0.4 | 0.4 |
| | MFA | | | 15.0 | 15.0 | 15.0 | 15.0 | 15.0 | 15.0 | 15.0 |
| Fan | Type | | - | Crossflow Fan | Crossflow Fan | Crossflow Fan | Crossflow Fan | Crossflow Fan | Crossflow Fan | Crossflow Fan |
| | Number of Fans | | - | 1 | 1 | 1 | 1 | 1 | 1 | 1 |
| | Airflow Rate | H/M/L (UL) | $m^3$/min | 6.2/5.7/5.1 | 6.6/5.7/5.1 | 7.0/6.2/5.5 | 8.5/7.5/6.6 | 13.9/12.4/11.2 | 14.4/12.9/11.2 | 15.7/14.1/12.9 |
| | | | l/s | 103.3/95.0/85.0 | 110.0/95.0/85.0 | 116.7/103.3/91.7 | 141.7/125.0/110.0 | 231.7/206.7/186.7 | 240.0/215.0/186.7 | 261.7/235.0/215.0 |
| Fan motor | Type | | - | SSR Feedback | SSR Feedback | SSR Feedback | SSR Feedback | SSR Feedback | SSR Feedback | SSR Feedback |
| | Output x n | | W | 19 x 1 | 19 x 1 | 19 x 1 | 19 x 1 | 28 x 1 | 28 x 1 | 28 x 1 |
| Piping Connections | Liquid Pipe | | ø, mm | 6.35 | 6.35 | 6.35 | 6.35 | 6.35 | 6.35 | 9.52 |
| | | | ø, inch | 1/4 | 1/4 | 1/4 | 1/4 | 1/4 | 1/4 | 3/8 |
| | Gas Pipe | | ø, mm | 12.7 | 12.7 | 12.7 | 12.7 | 6.35 | 6.35 | 9.52 |
| | | | ø, inch | 1/2 | 1/2 | 1/2 | 1/2 | 1/2 | 1/2 | 5/8 |
| | Drain Pipe | | ø, mm | ID 18 HOSE | ID 18 HOSE | ID 18 HOSE | ID 18 HOSE | ID 18 HOSE | ID 18 HOSE | ID 18 HOSE |
| Field Wiring | Power Source Wire | Minimum | $mm^2$ | 1.5 | 1.5 | 1.5 | 1.5 | 1.5 | 1.5 | 1.5 |
| | For connection with indoor | Minimum | $mm^2$ | 0.75 | 0.75 | 0.75 | 0.75 | 0.75 | 0.75 | 0.75 |
| | | Remark | - | F1, F2 | F1, F2 | F1, F2 | F1, F2 | F1, F2 | F1, F2 | F1, F2 |
| Refrigerant | Type | | - | R410A | R410A | R410A | R410A | R410A | R410A | R410A |
| | Control Method | | - | EEV NOT INCLUDED | EEV NOT INCLUDED | EEV NOT INCLUDED | EEV NOT INCLUDED | EEV NOT INCLUDED | EEV NOT INCLUDED | EEV NOT INCLUDED |
| Sound [2] | Sound Pressure | H/M/L | dB(A) | 30/28/25 | 31/28/25 | 31/29/26 | 36/33/29 | 38/35/33 | 39/36/33 | 40/38/35 |
| | Sound Power | Cooling | | 47 | 48 | 48 | 51 | 53 | 53 | 55 |
| Dimensions | Net Weight | | kg | 8.0 | 8.0 | 8.5 | 8.5 | 12.0 | 12.0 | 12.0 |
| | Net Dimensions (W × H × D) | | mm | 820 x 285 x 227 | 820 x 285 x 227 | 820 x 285 x 227 | 820 x 285 x 227 | 1,065 x 298 x 243 | 1,065 x 298 x 243 | 1,065 x 298 x 243 |

### Accessories



Touch Controller

MWR-SH11N



Wired Remote Controller

MWR-WE13N



Wired Remote Controller

MWR-WG00*N



Wi-Fi Kit

MIM-H04EN



External Thermostat

MRW-TA



VRF

# Dimensional drawings

## Boracay Wall-Mounted (EEV excluded)

AM015/022/028/036KNTD****

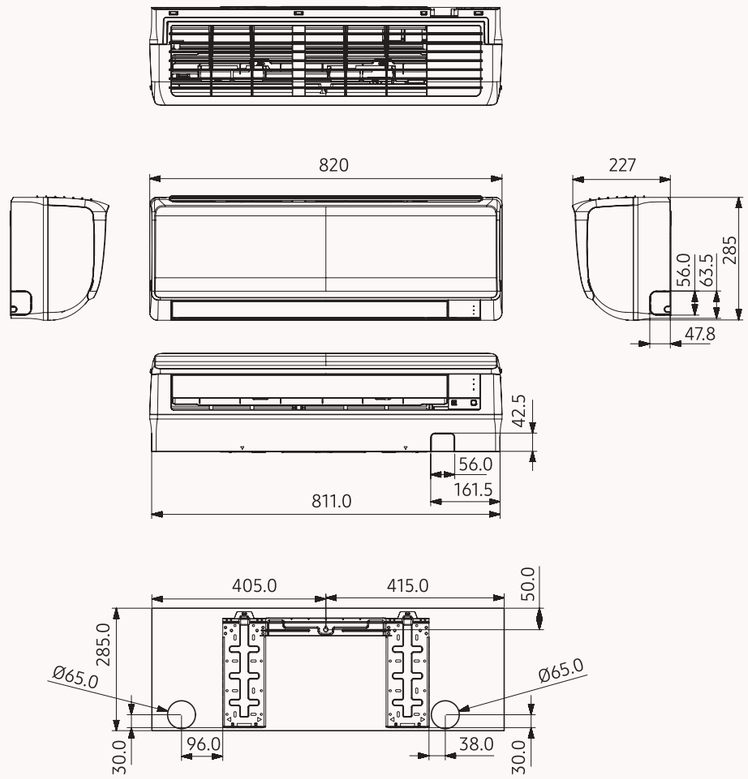


| NO | Name | Description |
|---|---|---|
| 1 | Liquid pipe connection | ø6.35 (1/4) |
| 2 | Gas pipe connection | ø12.70 (1/2) |
| 3 | Drain pipe connection | ID 18 HOSE |
| 4 | Power supply/communication wiring conduits | - |

AM045/056/071KNTD*****

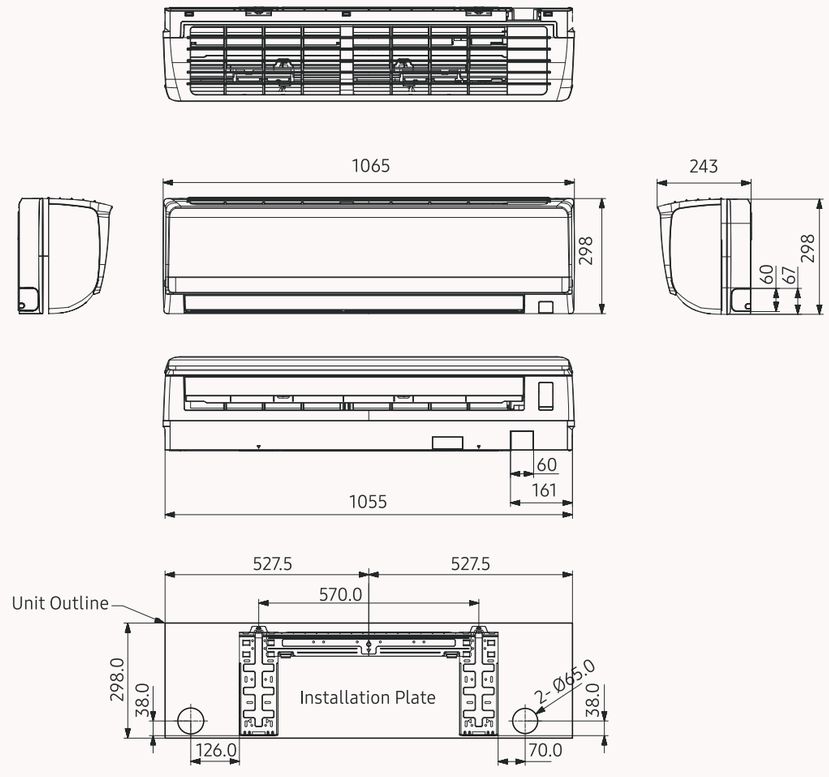


| NO | Name | Description |
|---|---|---|
| 1 | Liquid pipe connection | ø6.35 (1/4) |
| 2 | Gas pipe connection | ø12.70 (1/2) |
| 3 | Drain pipe connection | ID 18 HOSE |
| 4 | Power supply/communication wiring conduits | - |





VRF

# Specifications

## Boracay Wall-Mounted (EEV included)

- Motorised louvre provides an automatic change in airflow by directing the air up and down.
- Manual adjustable guide vane allows users to change the airflow from side to side (left to right).
- Turbo function provides fast and powerful cooling.
- Cross-flow fan direct driven by a single motor.
- Washable Full HD 80 filter.
- Four-direction drain and refrigerant piping connection as standard.



| Model | | | | AM015KNQDEH/EU | AM022KNQDEH/EU | AM028KNQDEH/EU |
|---|---|---|---|---|---|---|
| Power Supply | | | Φ, #, V, Hz | 1Φ, 2, 220~240 V, 50 Hz | 1Φ, 2, 220~240 V, 50 Hz | 1Φ, 2, 220~240 V, 50 Hz |
| Performance | | Cooling | kW | 1.5 | 2.2 | 2.8 |
| | | Heating | kW | 1.7 | 2.5 | 3.2 |
| Power | Power Input (Nominal) | Cooling | W | 32.0 | 32.0 | 38.0 |
| | | Heating | | 34.0 | 35.0 | 39.0 |
| | Current Input (Nominal) | Cooling | A | 0.20 | 0.20 | 0.22 |
| | | Heating | | 0.20 | 0.20 | 0.22 |
| | MCA | | | 0.3 | 0.3 | 0.4 |
| | MFA | | | 15.0 | 15.0 | 15.0 |
| Fan | Type | | - | Crossflow Fan | Crossflow Fan | Crossflow Fan |
| | Number of Fans | | - | 1 | 1 | 1 |
| | Airflow Rate | H/M/L (UL) | $m^3$/min | 6.2/5.7/5.1 | 6.6/5.7/5.1 | 7.0/6.2/5.5 |
| | | | l/s | 103.3/95.0/85.0 | 110.0/95.0/85.0 | 116.7/103.3/91.7 |
| Fan motor | Type | | - | SSR Feedback | SSR Feedback | SSR Feedback |
| | Output x n | | W | 19 x 1 | 19 x 1 | 19 x 1 |
| Piping Connections | Liquid Pipe | | ø, mm | 6.35 | 6.35 | 6.35 |
| | | | ø, inch | 1/4 | 1/4 | 1/4 |
| | Gas Pipe | | ø, mm | 12.7 | 12.7 | 12.7 |
| | | | ø, inch | 1/2 | 1/2 | 1/2 |
| | Drain Pipe | | ø, mm | ID 18 HOSE | ID 18 HOSE | ID 18 HOSE |
| | Heat Insulation | | - | Both liquid and gas pipes | Both liquid and gas pipes | Both liquid and gas pipes |
| Field Wiring | Power Source Wire | Minimum | $mm^2$ | 1.5 | 1.5 | 1.5 |
| | For connection with indoor | Minimum | $mm^2$ | 0.75 | 0.75 | 0.75 |
| | | Remark | - | F1, F2 | F1, F2 | F1, F2 |
| Refrigerant | Type | | - | R410A | R410A | R410A |
| | Control Method | | - | EEV INCLUDED | EEV INCLUDED | EEV INCLUDED |
| Sound [2] | Sound Pressure | H/M/L | dB(A) | 30/28/25 | 31/28/25 | 31/29/26 |
| | Sound Power | Cooling | | 47 | 48 | 48 |
| Dimensions | Net Weight | | kg | 8.5 | 8.5 | 9.0 |
| | Net Dimensions (W × H × D) | | mm | 820 x 285 x 227 | 820 x 285 x 227 | 820 x 285 x 227 |



| AM036KNQDEH/EU | AM045KNQDEH/EU | AM056KNQDEH/EU | AM071KNQDEH/EU |
|---|---|---|---|
| 1Φ, 2, 220~240 V, 50 Hz | 1Φ, 2, 220~240 V, 50 Hz | 1Φ, 2, 220~240 V, 50 Hz | 1Φ, 2, 220~240 V, 50 Hz |
| 3.6 | 4.5 | 5.6 | 6.8 |
| 4.0 | 5.0 | 6.3 | 7.0 |
| 42.0 | 47.0 | 48.0 | 51.0 |
| 42.0 | 47.0 | 48.0 | 53.0 |
| 0.23 | 0.27 | 0.27 | 0.28 |
| 0.23 | 0.27 | 0.27 | 0.28 |
| 0.4 | 0.4 | 0.4 | 0.4 |
| 15.0 | 15.0 | 15.0 | 15.0 |
| Crossflow Fan | Crossflow Fan | Crossflow Fan | Crossflow Fan |
| 1 | 1 | 1 | 1 |
| 8.5/7.5/6.6 | 13.9/12.4/11.2 | 14.4/12.9/11.2 | 15.7/14.1/12.9 |
| 141.7/125.0/110.0 | 231.7/206.7/186.7 | 240.0/215.0/186.7 | 261.7/235.0/215.0 |
| SSR Feedback | SSR Feedback | SSR Feedback | SSR Feedback |
| 19 x 1 | 28 x 1 | 28 x 1 | 28 x 1 |
| 6.35 | 6.35 | 6.35 | 9.52 |
| 1/4 | 1/4 | 1/4 | 3/8 |
| 12.7 | 12.7 | 12.7 | 15.88 |
| 1/2 | 1/2 | 1/2 | 5/8 |
| ID 18 HOSE | ID 18 HOSE | ID 18 HOSE | ID 18 HOSE |
| Both liquid and gas pipes | Both liquid and gas pipes | Both liquid and gas pipes | Both liquid and gas pipes |
| 1.5 | 1.5 | 1.5 | 1.5 |
| 0.75 | 0.75 | 0.75 | 0.75 |
| F1, F2 | F1, F2 | F1, F2 | F1, F2 |
| R410A | R410A | R410A | R410A |
| EEV INCLUDED | EEV INCLUDED | EEV INCLUDED | EEV INCLUDED |
| 36/33/29 | 38/35/33 | 39/36/33 | 40/38/35 |
| 51 | 53 | 53 | 55 |
| 9.0 | 12.5 | 12.5 | 12.5 |
| 820 x 285 x 227 | 1,065 x 298 x 243 | 1,065 x 298 x 243 | 1,065 x 298 x 243 |

### Accessories



Touch Controller

MWR-SH11N



Wired Remote Controller

MWR-WE13N



Wired Remote Controller

MWR-WG00*N



Wi-Fi Kit

MIM-H04EN



External Thermostat

MRW-TA





VRF

# Dimensional drawings

## Boracay Wall-Mounted (EEV included)

AM015/022/028/036KNQD****

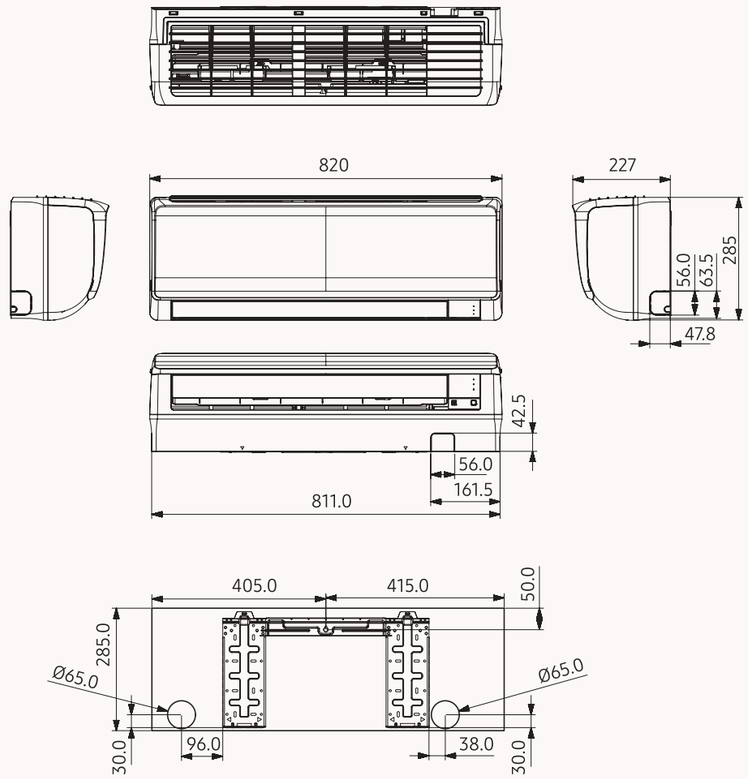


| NO | Name | Description |
|---|---|---|
| 1 | Liquid pipe connection | ø6.35 (1/4) |
| 2 | Gas pipe connection | ø12.70 (1/2) |
| 3 | Drain pipe connection | ID 18 HOSE |
| 4 | Power supply/communication wiring conduits | - |

AM045/056/071KNQD*****

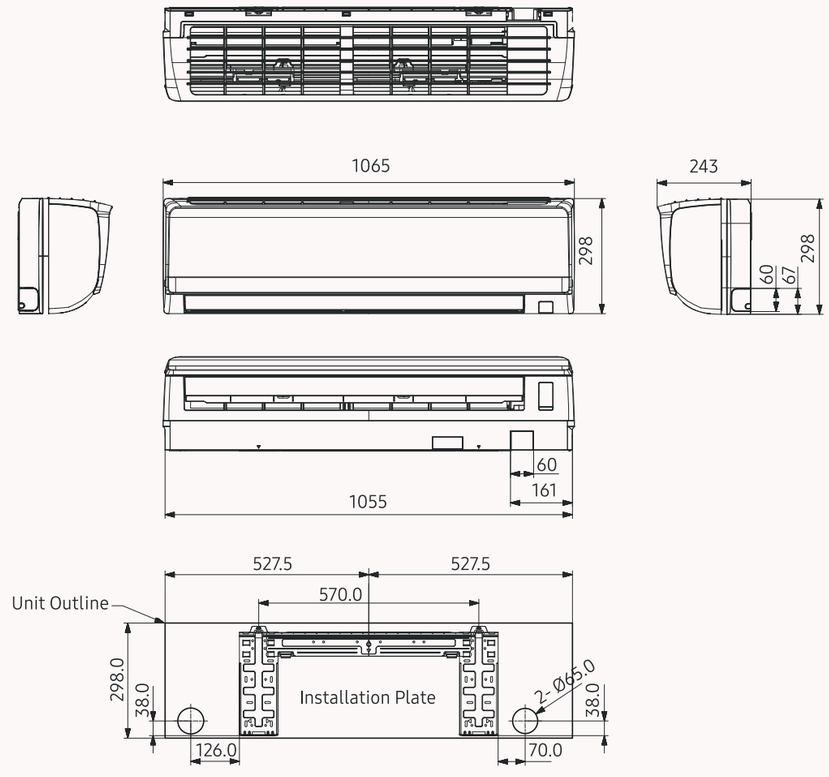


| NO | Name | Description |
|---|---|---|
| 1 | Liquid pipe connection | ø6.35 (1/4) |
| 2 | Gas pipe connection | ø12.70 (1/2) |
| 3 | Drain pipe connection | ID 18 HOSE |
| 4 | Power supply/communication wiring conduits | - |





VRF

# Specifications

## AR5000 Wall-Mounted (EEV included)

- Triangular Architecture which enlarges the air intake and air outlet areas, resulting in increased airflow.
- Motorised louvre provides an automatic change in airflow by directing the air up and down.
- Manual adjustable guide vane allows users to change the airflow from side to side (left to right).
- Cross-flow fan direct driven by a single motor.
- Wireless remote control is included.
- Compatible with Wi-Fi Kit controller.





| Model | | | | AM015JNVDKH/EU | AM022JNADKH/EU | AM028JNADKH/EU | AM036JNADKH/EU | AM045JNAdKH/EU | AM056JNADKH/EU | AM071JNADKH/EU | AM082JNADKH/EU |
|---|---|---|---|---|---|---|---|---|---|---|---|
| Power Supply | | | Φ, #, V, Hz | 1Φ, 2, 220~240 V, 50/60 Hz | 1Φ, 2, 220~240 V, 50/60 Hz | 1Φ, 2, 220~240 V, 50/60 Hz | 1Φ, 2, 220~240 V, 50/60 Hz | 1Φ, 2, 220~240 V, 50/60 Hz | 1Φ, 2, 220~240 V, 50/60 Hz | 1Φ, 2, 220~240 V, 50/60 Hz | 1Φ, 2, 220~240 V, 50/60 Hz |
| Performance | Capacity (Nominal) | Cooling | kW | 1.5 | 2.2 | 2.8 | 3.6 | 4.5 | 5.6 | 7.1 | 8.2 |
| | | Heating | | 1.7 | 2.5 | 3.2 | 4.0 | 5.0 | 6.3 | 8.0 | 8.5 |
| Power | Power Input (Nominal) | Cooling | W | 14.0 | 15.0 | 16.0 | 20.0 | 31.0 | 27.0 | 41.0 | 55.0 |
| | | Heating | | 16.0 | 18.0 | 24.0 | 28.0 | 41.0 | 37.0 | 53.0 | 72.0 |
| | Current Input (Nominal) | Cooling | A | 0.12 | 0.13 | 0.13 | 0.15 | 0.24 | 0.21 | 0.31 | 0.42 |
| | | Heating | | 0.13 | 0.15 | 0.19 | 0.20 | 0.31 | 0.29 | 0.41 | 0.55 |
| Fan | Motor | Type | - | Crossflow Fan | Crossflow Fan | Crossflow Fan | Crossflow Fan | Crossflow Fan | Crossflow Fan | Crossflow Fan | Crossflow Fan |
| | | Output | W | 27 x 1 | 27 x 1 | 27 x 1 | 27 x 1 | 27 x 1 | 27 x 1 | 27 x 1 | 27 x 1 |
| | Airflow Rate | H/M/L (UL) | $m^3$/min | 4.40/4.20/3.80 | 5.40/4.70/4.00 | 5.70/5.00/4.30 | 7.10/5.70/4.60 | 8.90/7.50/6.00 | 11.80/10.00/8.20 | 14.80/12.40/10.00 | 16.70/14.30/12.40 |
| | | | l/s | 73.33/70.00/63.33 | 90.00/78.33/66.67 | 95.00/83.33/71.67 | 118.33/95.00/76.67 | 148.33/125.00/100.00 | 196.67/166.67/136.67 | 246.67/206.67/166.67 | 278.33/238.33/206.67 |
| Piping Connections | Liquid Pipe | | ø, mm | 6.35 | 6.35 | 6.35 | 6.35 | 6.35 | 6.35 | 9.52 | 9.52 |
| | | | ø, inch | 1/4 | 1/4 | 1/4 | 1/4 | 1/4 | 1/4 | 3/8 | 3/8 |
| | Gas Pipe | | ø, mm | 12.70 | 12.70 | 12.70 | 12.70 | 12.70 | 12.70 | 15.88 | 15.88 |
| | | | ø, inch | 1/2 | 1/2 | 1/2 | 1/2 | 1/2 | 1/2 | 5/8 | 5/8 |
| | Drain Pipe | | ø, mm | ID 18 HOSE | ID 18 HOSE | ID 18 HOSE | ID 18 HOSE | ID 18 HOSE | ID 18 HOSE | ID 18 HOSE | ID 18 HOSE |
| Field Wiring | Power Source Wire | | $mm^2$ | 1.5/2.5 | 1.5/2.5 | 1.5/2.5 | 1.5/2.5 | 1.5/2.5 | 1.5/2.5 | 1.5/2.5 | 1.5/2.5 |
| | Transmission Cable | | $mm^2$ | 0.75~1.50 | 0.75~1.50 | 0.75~1.50 | 0.75~1.50 | 0.75~1.50 | 0.75~1.50 | 0.75~1.50 | 0.75~1.50 |
| Refrigerant | Type | | - | R410A | R410A | R410A | R410A | R410A | R410A | R410A | R410A |
| | Control Method | | - | EEV INCLUDED | EEV INCLUDED | EEV INCLUDED | EEV INCLUDED | EEV INCLUDED | EEV INCLUDED | EEV INCLUDED | EEV INCLUDED |
| Sound [2] | Sound Pressure | (H/M/L) | dB(A) | 28/25/24 | 33/29/25 | 36/31/25 | 37/34/30 | 41/38/34 | 39/36/33 | 44/41/36 | 47/43/40 |
| | Sound Power | Cooling | | 44 | 50 | 53 | 54 | 57 | 57 | 61 | 65 |
| Dimensions | Net Weight | | kg | 7.9 | 7.9 | 7.9 | 9.6 | 9.6 | 14.5 | 14.5 | 14.5 |
| | Net Dimensions (W × H × D) | | mm | 750 x 249 x 246 | 750 x 249 x 246 | 750 x 249 x 246 | 826 x 261 x 261 | 826 x 261 x 261 | 1,065 x 301 x 294 | 1,065 x 301 x 294 | 1,065 x 301 x 294 |

### Accessories



Wireless Remote Controller

AR-EH03E



Touch Controller

MWR-SH11N



Wired Remote Controller

MWR-WE13N



Wired Remote Controller

MWR-WG00*N



Wi-Fi Kit

MIM-H04EN



External Thermostat

MRW-TA



VRF

# Dimensional drawings

## AR5000 Wall-Mounted (EEV included)

AM015JNVDKH/EU AM022JNADKH/EU AM028JNADKH/EU

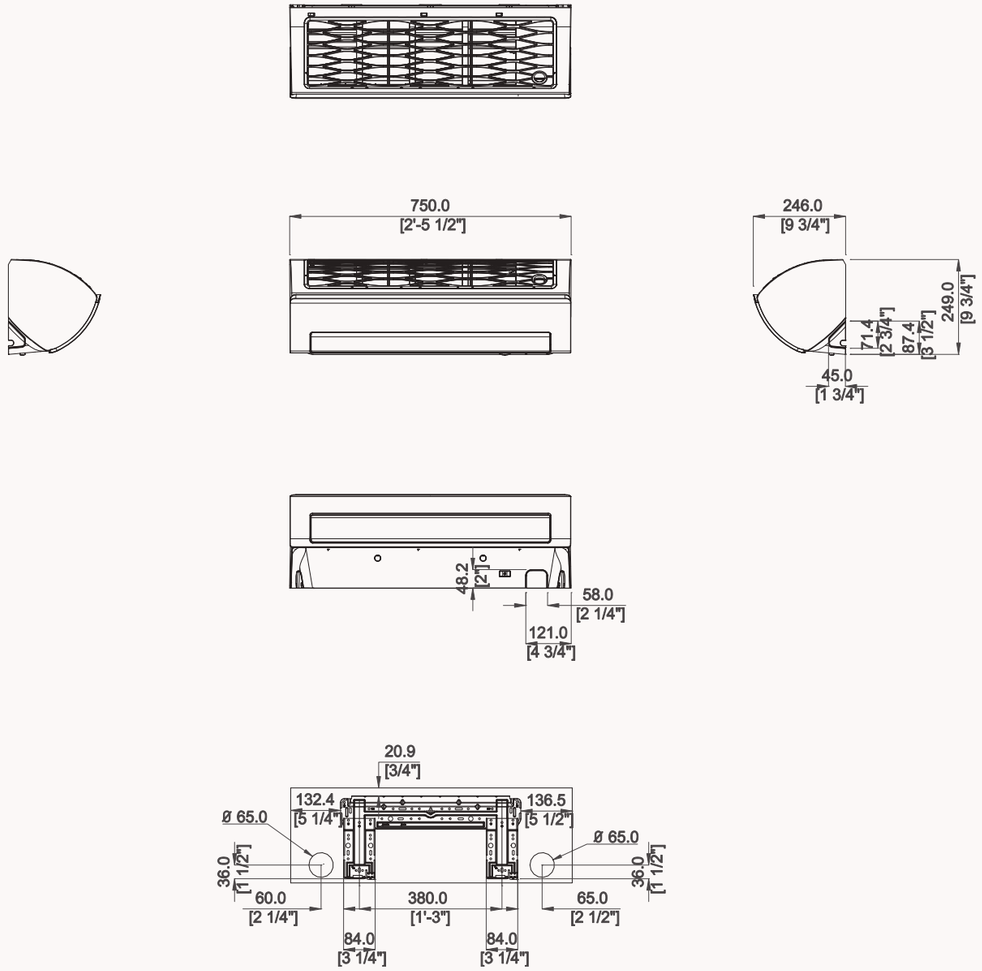


| NO | Name | Description |
|---|---|---|
| 1 | Refrigerant gas pipe | ø12.70 (1/2) Flare |
| 2 | Refrigerant liquid pipe | ø6.35 (1/4) Flare |
| 3 | Drain pipe connection | ID 18 Hose |

AM036JNADKH/EU AM045JNADKH/EU

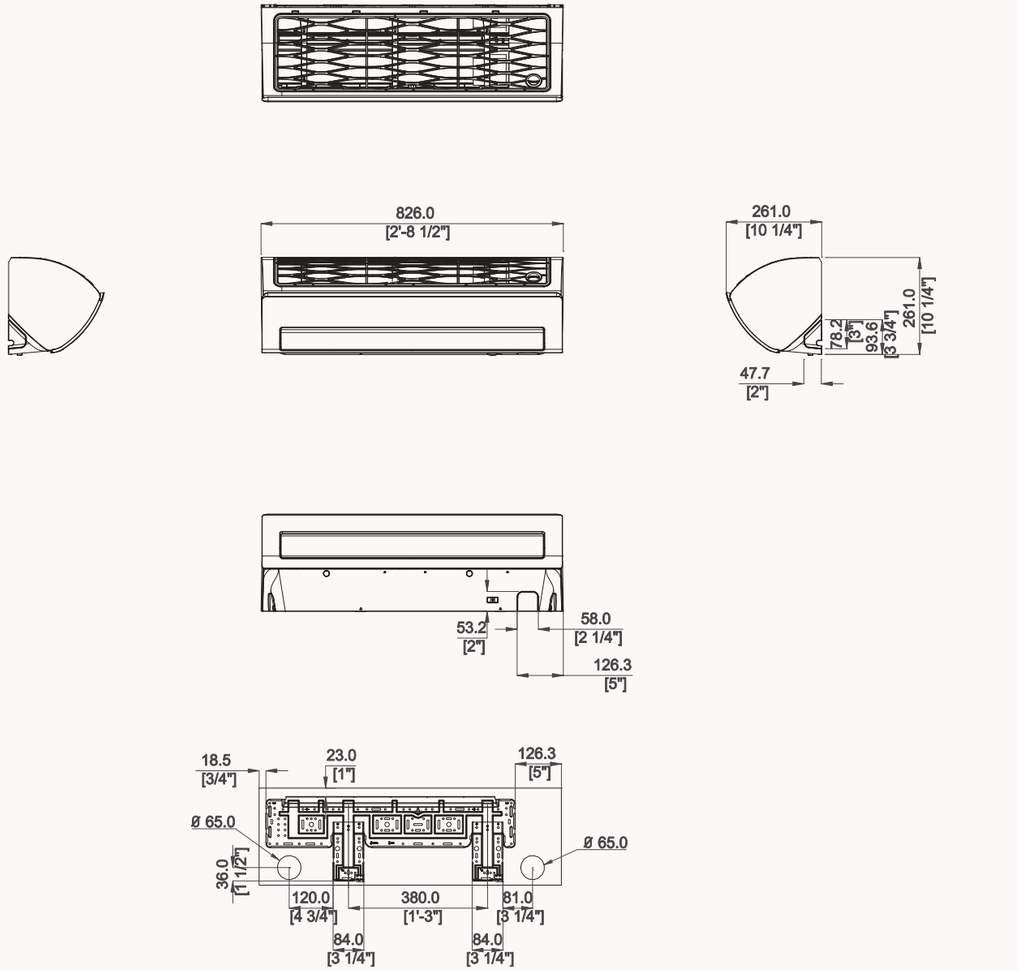


| NO | Name | Description |
|---|---|---|
| 1 | Refrigerant gas pipe | ø12.70 (1/2) Flare |
| 2 | Refrigerant liquid pipe | ø6.35 (1/4) Flare |
| 3 | Drain pipe connection | ID 18 Hose |

# Specifications

## Max Wall-Mounted

- Cross-flow fan direct driven by a single BLDC motor.
- Return air is filtered by means of an easily removable, washable Full HD 80 filter.
- Motorised louvre provides an automatic change in airflow by directing the air up and down.
- Manual adjustable guide vane allows users to change the airflow from side to side (left to right).



| Model | | | | AM093MNQDEH/EU |
|---|---|---|---|---|
| Power Supply | | | Φ, #, V, Hz | 1Φ, 2, 220~240 V, 50 Hz |
| Performance | Capacity | Cooling | kW | 9.3 |
| | | Heating | | 9.8 |
| Power | Power Input | Cooling | W | 66 |
| | | Heating | | 76 |
| | Current Input | Cooling | A | 0.47 |
| | | Heating | | 0.54 |
| | Current | MCA | A | 0.68 |
| | | MFA | | 15 |
| Fan | Type | | - | Crossflow Fan |
| | Number of Fans | | - | 1 |
| | Airflow Rate | H/M/L | m³/min | 23/20/17 |
| | | | l/s | 383/333/283 |
| Fan Motor | Type | | - | BLDC Motor |
| | Output x n | | W | 58 x 1 |
| Piping Connections | Liquid Pipe | | ø, mm | 9.52 |
| | | | ø, inch | 3/8 |
| | Gas Pipe | | ø, mm | 15.88 |
| | | | ø, inch | 5/8 |
| | Drain Pipe | | ø, mm | ID 18 HOSE |
| Wiring Connections | Communication | Min. | mm² | 0.75 |
| | | Remark | - | F1, F2 |
| Refrigerant | Type | | - | R410A |
| | Electronic Expansion Valve | | - | EEV INCLUDED |
| Sound [2] | Sound Pressure | H/M/L | dB(A) | 49/46/42 |
| | Sound Power | Cooling | | 66 |
| Dimensions | Net Weight | | kg | 18.5 |
| | Net Dimensions (W × H × D) | | mm | 1,280 x 345 x 253 |

**Accessories**



Touch Controller — MWR-SH11N



Wired Remote Controller — MWR-WE13N



Wired Remote Controller — MWR-WG00*N



Wi-Fi Kit — MIM-H04EN



External Thermostat — MRW-TA



# Dimensional drawings

## Max Wall-Mounted

**AM093MNQDEH**

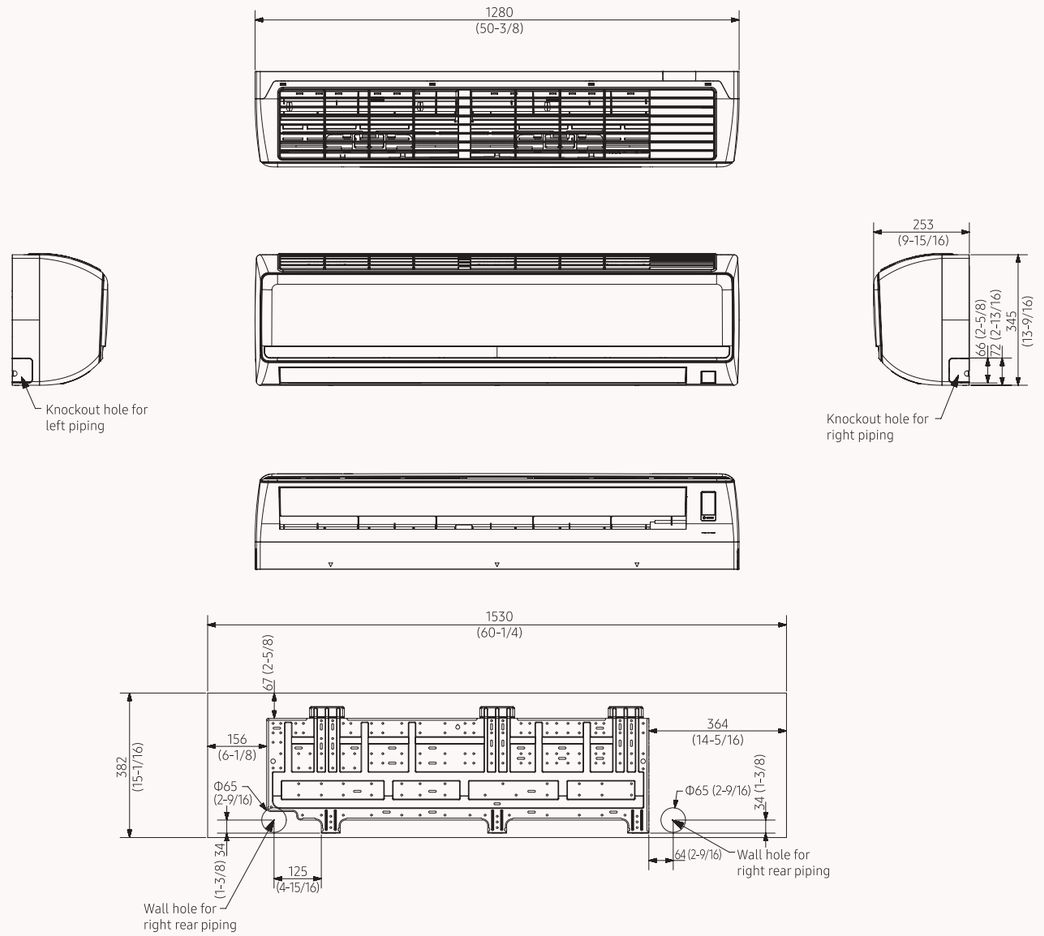


| NO | Name | Description |
|---|---|---|
| 1 | Liquid pipe connection | ø9.52 (3/8) |
| 2 | Gas pipe connection | ø15.88 (5/8) |
| 3 | Drain pipe connection | ID 18 HOSE |
| 4 | Power supply/communication wiring conduits | - |

# Specifications

## Hydro Unit

- Production of low temperature hot water and chilled water.
- Hot water production to a maximum temperature of 50 °C.
- Two-way control: leaving water temperature and room temperature control.
- Connection to low temperature radiators and AHU water coils.
- Hot water production for sanitary use.
- Connectable to Heat Recovery DVM S systems.





| Model (HE) | | | | AM160FNBDEH/EU | AM320FNBDEH/EU | AM500FNBDEH/EU |
|---|---|---|---|---|---|---|
| Power Supply | | | Φ, #, V, Hz | 1Φ, 2, 220~240 V, 50 Hz | 1Φ, 2, 220~240 V, 50 Hz | 1Φ, 2, 220~240 V, 50 Hz |
| Performance | Capacity (Nominal) | Cooling | kW | 14.0 | 28,0 | 44.8 |
| | | Heating | | 16.0 | 31.5 | 50.4 |
| Power | Power Input (Nominal) | Cooling | W | 10 | 10 | 10 |
| | | Heating | | 10 | 10 | 10 |
| | Current Input (Nominal) | Cooling | A | 0.05 | 0.05 | 0.05 |
| | | Heating | | 0.05 | 0.05 | 0.05 |
| | MCA (Including External Contact) | | | 2.2 | 2.2 | 2.2 |
| | MFA | | A | 2.75 | 2.75 | 2.75 |
| Heat Exchanger | Type | | - | PHE | PHE | PHE |
| | Quantity | | - | 1 | 1 | 1 |
| | Pipe Size | | ø, inch | PT1 (25A) | PT1 (25A) | PT1 1/4 (32A) |
| | Water Flow Rate | | l/min | 48 | 92 | 150 |
| | Flow Switch | | l/min | 20 | 30 | 50 |
| Piping Connections | Liquid Pipe | | ø, mm | 9.52 | 9.52 | 12.70 |
| | Gas Pipe | | ø, mm | 15.88 | 22.20 | 28.58 |
| | | | ø, inch | 5/8 | 7/8 | 1 1/8 |
| Field Wiring | Power Source Wire (L<10 m, Single Installation) | | mm² | 2.5 | 2.5 | 2.5 |
| | Transmission Cable | | mm² | 0.75~1.50 | 0.75~1.50 | 0.75~1.50 |
| Refrigerant | Type | | - | R410A | R410A | R410A |
| | Control Method | | - | EEV | EEV | EEV |
| Sound [2] | Sound Pressure | | dB(A) | 27 | 28 | 31 |
| Dimensions | Net Weight | | kg | 29.0 | 33.0 | 40.0 |
| | Net Dimensions (W × H × D) | | mm | 518 x 627 x 330 | 518 x 627 x 330 | 518 x 627 x 330 |
| Operating Temperature Range | Ambient | Cooling | ˚C | -5.0~48.0 | -5.0~48.0 | -5.0~48.0 |
| | | Heating | ˚C | -20.0~35.0 | -20.0~35.0 | -20.0~35.0 |
| | | Hot Water (Main Cooling, HR) | ˚C | -20.0~35.0 (43.0) | -20.0~35.0 (43.0) | -20.0~35.0 (43.0) |
| | Leaving Water | Cooling | ˚C | 5.0~30.0 | 5.0~30.0 | 5.0~30.0 |
| | | Heating | ˚C | 20.0~50.0 | 20.0~50.0 | 20.0~50.0 |

### Accessories




| Wired Remote Controller | Wired Remote Controller |
|---|---|
| MWR-WW00N | MWR-WG00*N |










| Model (HT) | | | | AM160FNBFEB/EU | AM160FNBFGB/EU | AM250FNBFEB/EU | AM250FNBFGB/EU |
|---|---|---|---|---|---|---|---|
| Power Supply | | | Φ, #, V, Hz | 1Φ, 2, 220~240 V, 50 Hz | 3Φ, 4, 380~415 V, 50 Hz | 1Φ, 2, 220~240 V, 50 Hz | 3Φ, 4, 380~415 V, 50 Hz |
| Performance | Capacity (Nominal) | Cooling | kW | - | - | - | - |
| | | Heating | | 16 | 16 | 25 | 25 |
| Power | Power Input (Nominal) | Cooling | W | - | - | - | - |
| | | Heating | | 3,100 | 3,100 | 5,000 | 5,000 |
| | Current Input (Nominal) | Cooling | A | - | - | - | - |
| | | Heating | | 14.30 | 4.85 | 23.10 | 7.85 |
| | MCA (Including External Contact) | | | 24.15 | 12.88 | 32.15 | 12.88 |
| | MFA | | | 30.19 | 16.10 | 40.19 | 16.10 |
| Heat Exchanger | Type | | - | PHE | PHE | PHE | PHE |
| | Quantity | | - | 2 | 2 | 2 | 2 |
| | Pipe Size | | ø, inch | PT1 (25A) | PT1 (25A) | PT1 (25A) | PT1 (25A) |
| | Water Flow Rate | | l/min | 23 | 23 | 36 | 36 |
| | Flow Switch | | l/min | 12 | 12 | 12 | 12 |
| Piping Connections | Liquid Pipe | | ø, mm | 9.52 | 9.52 | 9.52 | 9.52 |
| | Gas Pipe | | ø, mm | 15.88 | 15.88 | 15.88 | 15.88 |
| | | | ø, inch | 5/8 | 5/8 | 5/8 | 5/8 |
| Field Wiring | Power Source Wire (L<10 m, Single Installation) | | mm² | 4.0 | 2.5 | 4.0 | 2.5 |
| | Transmission Cable | | mm² | 0.75~1.50 | 0.75~1.50 | 0.75~1.50 | 0.75~1.50 |
| Refrigerant | Type | | - | R134A | R134A | R134A | R134A |
| | Control Method | | - | EEV | EEV | EEV | EEV |
| | Factory Charging | | kg / tCO$_2$e | 2.15/3.07 | 2.15/3.07 | 2.15/3.07 | 2.15/3.07 |
| Sound [2] | Sound Pressure | | dB(A) | 42 | 42 | 42 | 42 |
| | Sound Power | | | - | - | - | - |
| Dimensions | Net Weight | | kg | 104.0 | 104.0 | 104.0 | 104.0 |
| | Net Dimensions (W × H × D) | | mm | 518 x 1,210 x 330 | 518 x 1,210 x 330 | 518 x 1,210 x 330 | 518 x 1,210 x 330 |
| Operating Temperature Range | Ambient | Cooling | ˚C | - | - | - | - |
| | | Heating | ˚C | -20.0~35.0 | -20.0~35.0 | -20.0~35.0 | -20.0~35.0 |
| | | Hot Water (Main Cooling, HR) | ˚C | -20.0~35.0 (43.0) | -20.0~35.0 (43.0) | -20.0~35.0 (43.0) | -20.0~35.0 (43.0) |
| | Leaving Water | Heating | ˚C | 25.0~80.0 | 25.0~80.0 | 25.0~80.0 | 25.0~80.0 |

# Dimensional drawings

## Hydro Unit

### AM***FNBDEH/EU

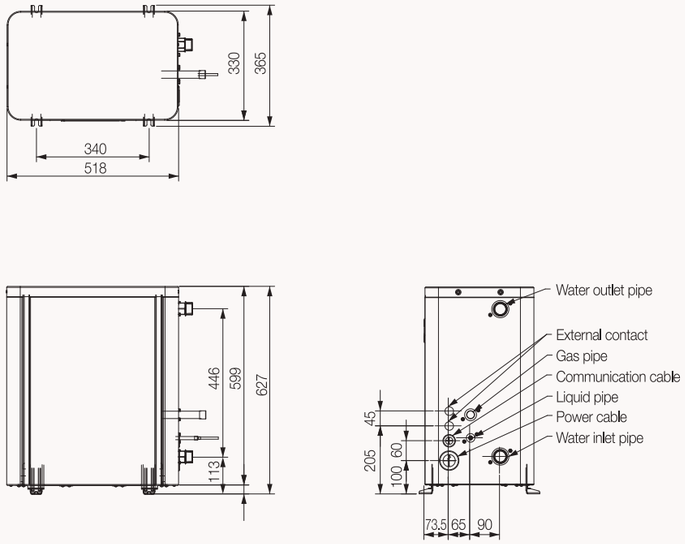


### AM***FNBFEB/EU

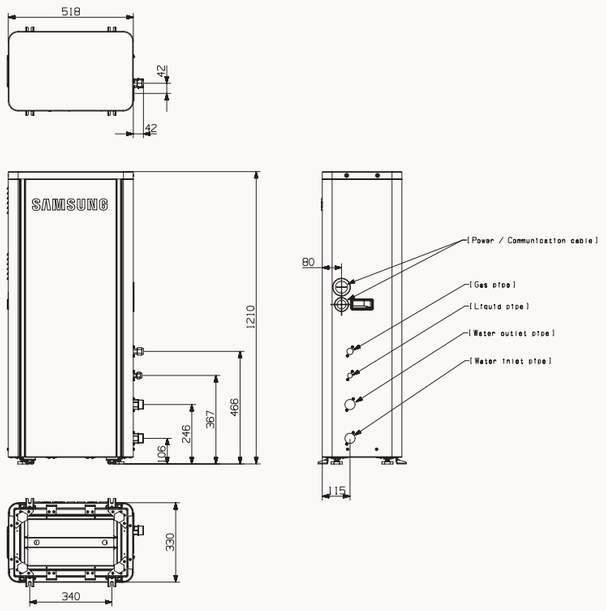




VRF

# Specifications

## Mode Control Unit (MCU)

- Enable simultaneous heating and cooling for DVM Heat Recovery model.



| Model | | | MCU-R4NEK0N | MCU-S6NEK3N |
|---|---|---|---|---|
| Type | | | HR Changer | MCU |
| Power Supply | | Φ, #, V, Hz | 1Φ, 220~240 V, 50/60 Hz | 1Φ, 220~240 V, 50/60 Hz |
| Mode | | - | Heat Recovery | Heat Recovery |
| Max. number of indoor units | | - | 12 | 18 |
| Max. indoor units per port | | - | 3 | 3 |
| Number of ports | | - | 4 | 6 |
| Max. capacity of indoor units | | kW | 22.4 | 22.4 |
| Max. capacity of indoor units per port | | kW | 5.6 | 5.6 |
| | Y-Joint | kW | 14.0 | 14.0 |
| Refrigerant | Additional Refrigerant Charging | kg/unit | 0.5 | 0.5 |
| Piping Connections | Outdoor Unit - Liquid Pipe | ø, mm | 9.52 | 9.52 |
| | | ø, inch | 3/8 | 3/8 |
| | Gas Pipe (Low Pressure) | ø, mm | 19.05 | 19.05 |
| | | ø, inch | 3/4 | 3/4 |
| | Gas Pipe (High Pressure) | ø, mm | 15.88 | 15.88 |
| | | ø, inch | 5/8 | 5/8 |
| | Indoor Unit - Liquid Pipe | ø, mm | 6.35 | 6.35 |
| | | ø, inch | 1/4 | 1/4 |
| | Gas Pipe | ø, mm | 12.70 | 12.70 |
| | | ø, inch | 1/2 | 1/2 |
| External Dimensions | Net Weight | kg | 21.3 | 24.3 |
| | Net Dimensions (W x H x D) | mm | 728 x 199 x 469 | 728 x 199 x 469 |
| Operating Temperature Range | Cooling | ℃ | -5.0~48.0 | -5.0~48.0 |
| | Heating | ℃ | -25.0~26.0 | -25.0~26.0 |







| Model Name | | | | MCU-S1NEK1N | MCU-S2NEK2N | MCU-S4NEK3N | MCU-S6NEK2N |
|---|---|---|---|---|---|---|---|
| Power Supply | | | Φ, #, V, Hz | 1Φ, 2, 220~240 V, 50 Hz, 1Φ, 2, 208~230 V, 60 Hz | | | |
| Power | Power Input (Nominal) | Cooling | W | 19 | 25 | 40 | 55 |
| | | Heating | | 19 | 25 | 40 | 55 |
| | Current Input (Nominal) | Cooling | A | 0.20 | 0.20 | 0.20 | 0.30 |
| | | Heating | | 0.20 | 0.20 | 0.20 | 0.30 |
| | MCA | | A | 2.0 | 2.0 | 2.0 | 2.0 |
| | MFA (MOP) | | A | 15.0 | 15.0 | 15.0 | 15.0 |
| Max. number of connectable indoor units | | | - | 8 | 16 | 32 | 32 |
| Max. number of connectable indoor units per branch | | | - | 8 | 8 | 8 | 8 |
| Number of branches | | | - | 1 | 2 | 4 | 6 |
| Max. capacity of connectable indoor units | | | kW | 16.0 | 32.0 | 61.6 | 61.6 |
| Max. capacity of connectable indoor units per branch | - | | kW | 16.0 | 16.0 | 16.0 | 16.0 |
| | Y-Joint | | kW | - | 32.0 | 32.0 | 32.0 |
| Field Wiring | Power Source Wire | | mm² | 2.5 | 2.5 | 2.5 | 2.5 |
| | Transmission Cable | | mm² | 0.75~1.50 | 0.75~1.50 | 0.75~1.50 | 0.75~1.50 |
| Sound Pressure | Stable Cooling Operation | | dB(A) | 33 | 34 | 36 | 36 |
| | Heating-to-Cooling Changeover | | | 50 | 50 | 50 | 50 |
| Additional Refrigerant Charging | | | kg/unit | 0.5 | 0.5 | 0.5 | 0.5 |
| Piping Connections | Outdoor Unit | Liquid Pipe | ø, mm | 9.52 | 15.88 | 15.88 | 15.88 |
| | | | ø, inch | 3/8 | 5/8 | 5/8 | 5/8 |
| | | Gas Pipe | ø, mm | 22.22 | 28.58 | 28.58 | 28.58 |
| | | | ø, inch | 7/8 | 1 1/8 | 1 1/8 | 1 1/8 |
| | | Discharge Gas | ø, mm | 19.05 | 28.58 | 28.58 | 28.58 |
| | | | ø, inch | 3/8 | 1 1/8 | 1 1/8 | 1 1/8 |
| | Indoor Unit | Liquid Pipe | ø, mm | 9.52 | 9.52 | 9.52 | 9.52 |
| | | | ø, inch | 3/8 | 3/8 | 3/8 | 3/8 |
| | | Gas Pipe | ø, mm | 15.88 | 15.88 | 15.88 | 15.88 |
| | | | ø, inch | 5/8 | 5/8 | 5/8 | 5/8 |
| External Dimensions | Net Weight | | kg | 11.0 | 21.0 | 24.5 | 28.5 |
| | Net Dimensions (W x H x D) | | mm | 338 x 409 x 199 | 728 x 469 x 199 | 728 x 469 x 199 | 728 x 469 x 199 |
| Operation Limit | Cooling | | ℃ (℉) | -15.0~48.0 (5.0~118.4) | -15.0~48.0 (5.0~118.4) | -15.0~48.0 (5.0~118.4) | -15.0~48.0 (5.0~118.4) |
| | Heating | | ℃ (℉) | -25.0~24.0 (-13.0~75.2) | -25.0~24.0 (-13.0~75.2) | -25.0~24.0 (-13.0~75.2) | -25.0~24.0 (-13.0~75.2) |

# Dimensional drawings

## Mode Control Unit (MCU)

### MCU-R4NEKON

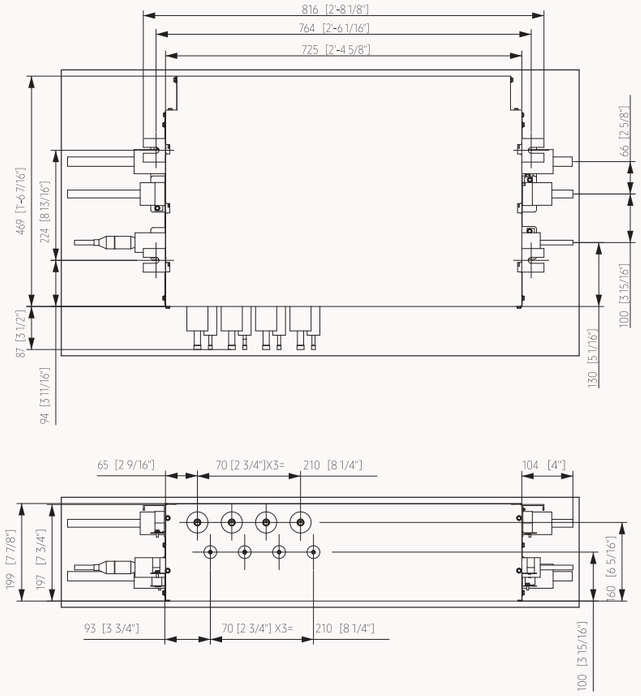


### MCU-S6NEK3N

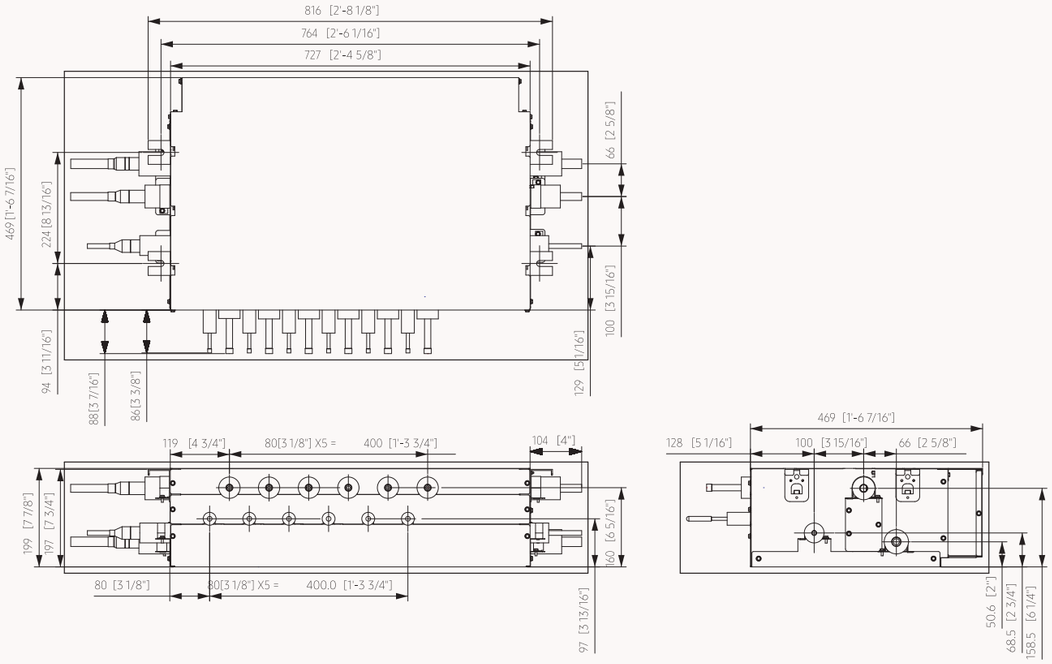

# Dimensional drawings

## Mode Control Unit (MCU)

### MCU-S1NEK1N

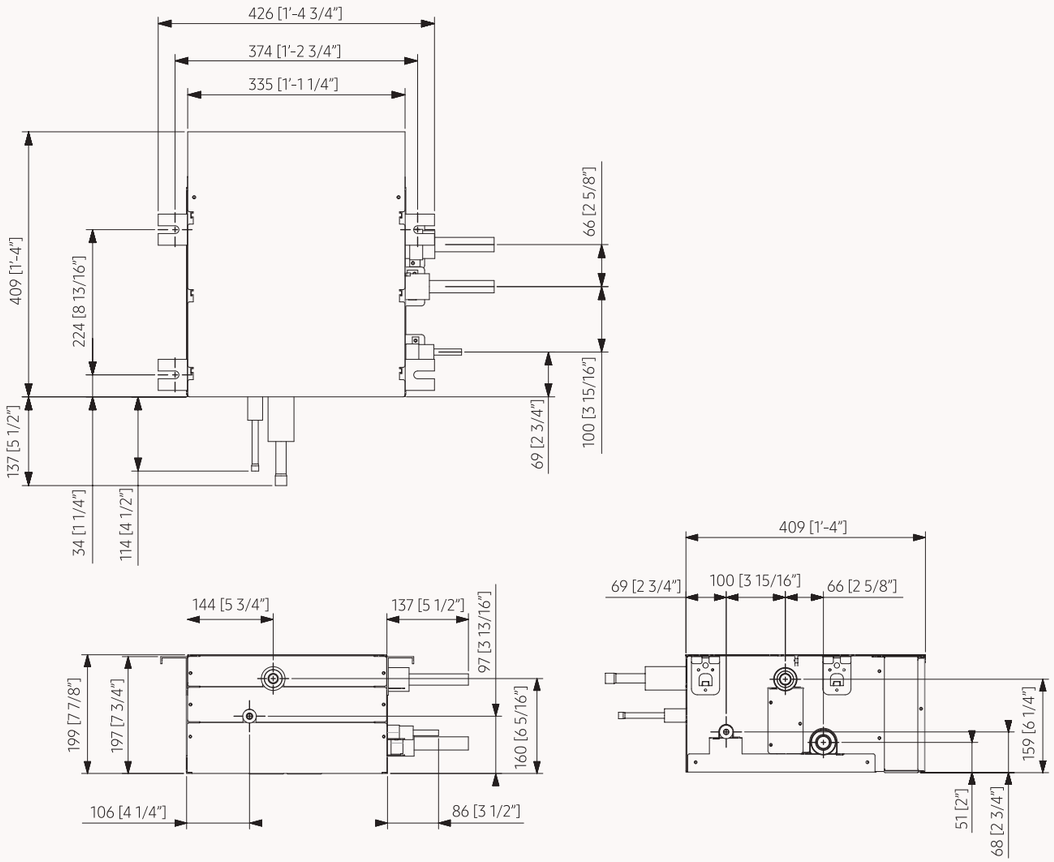


### MCU-S2NEK2N

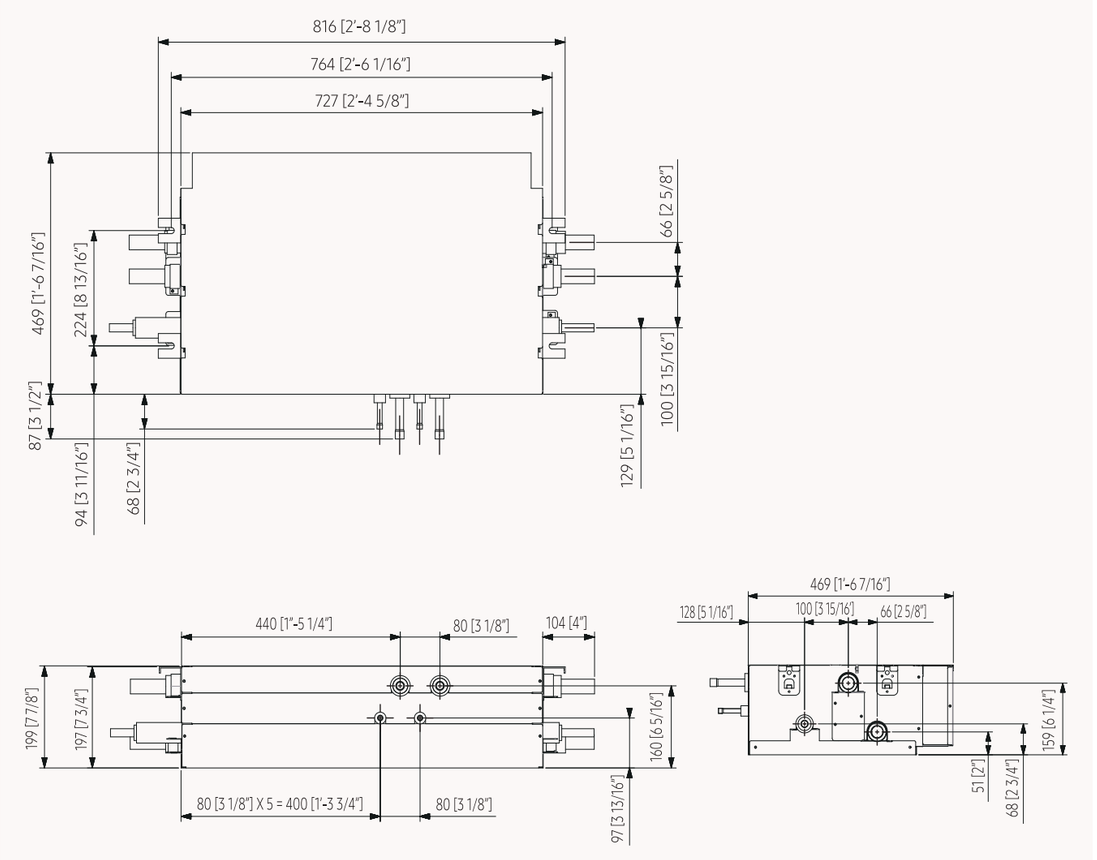

# Dimensional drawings

## Mode Control Unit (MCU)

### MCU-S4NEK3N

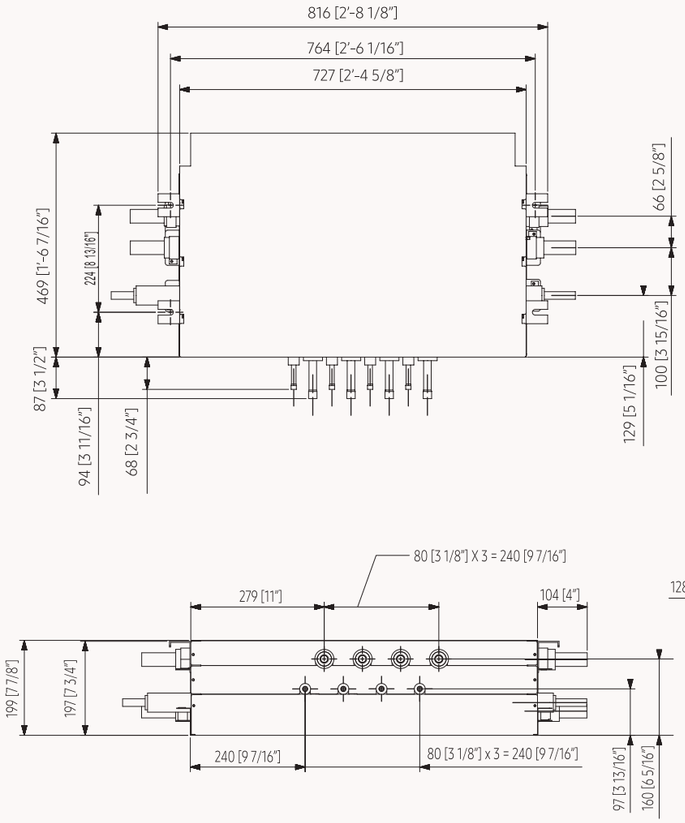


### MCU-S6NEK2N

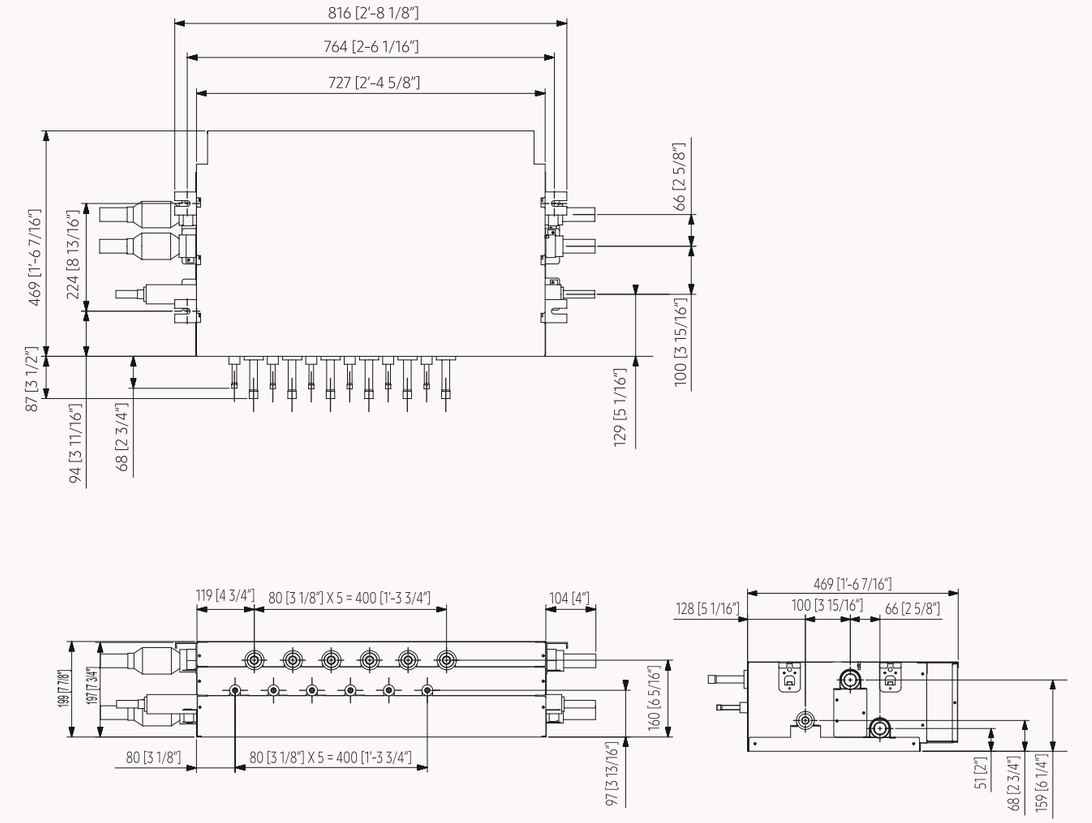

# Specifications

## AHU Kit for Outdoor Unit

- Provide the benefits of the AHU and DVM systems at the same time.
- Centralised air conditioning system.
- The AHU kit can provide cooling, heating, ventilation and humidity in one package.








| Model | | | | AHU Kit MXD-K025AN | AHU Kit MXD-K050AN | AHU Kit MXD-K075AN | AHU Kit MXD-K100AN | Control Kit MCM-D201N (10/20/30/40HP) | EEV Kit (Optional) MXD-A64K100E (10HP) |
|---|---|---|---|---|---|---|---|---|---|
| Connectable Outdoor | | | | HP/HR | HP/HR | HP/HR | HP/HR | HP | HP |
| Power Supply | | | Φ, #, V, Hz | 1Φ, 2, 220~240 V, 50/60 Hz | 1Φ, 2, 220~240 V, 50/60 Hz | 1Φ, 2, 220~240 V, 50/60 Hz | 1Φ, 2, 220~240 V, 50/60 Hz | 1Φ, 2, 220~240 V, 50/60 Hz | - |
| Design Recommendation | AHU Capacity Allowance | Max. | kW | 8.8 | 17.5 | 24.9 | 35.0 | 35.0/70.0/105.0/140.0 | 35.0 |
| | | | MBH | 30 | 60 | 85 | 120 | 119/239/358/478 | 119 |
| | | Min. | kW | 6.3 | 12.6 | 18.9 | 25.2 | 25.2/50.4/75.6/100.8 | 25.2 |
| | | | MBH | 21.6 | 43.2 | 64.8 | 86.4 | 86.4/172.8/259.2/345.6 | 86.4 |
| | AHU Internal Heat Exchanger Volume Allowance | Max. | $cm^3$ | 2.0 | 4.0 | 6.0 | 8.0 | 8.0/16.0/24.0/32.0 | 8.0 |
| | | Min. | $cm^3$ | 1.2 | 2.4 | 4.1 | 6.1 | 6.1/12.2/18.3/24.4 | 6.1 |
| Piping Connections (EEV Kit) | High pressure pipe from outdoor unit | | ø, mm | 9.52 | 9.52 | 9.52 | 9.52 | - | 12.70 |
| | | | ø, inch | 3/8 | 3/8 | 3/8 | 3/8 | - | 1/2 |
| | High pressure pipe to AHU | | ø, mm | 9.52 | 9.52 | 9.52 | 9.52 | - | 12.70 |
| | | | ø, inch | 3/8 | 3/8 | 3/8 | 3/8 | - | 1/2 |
| Sensor | EVA. IN | | Type/Φ | 103HW/6Φ | 103HW/6Φ | 103HW/6Φ | 103HW/6Φ | 103HW/6Φ | - |
| | | | $m/mm^2$ | 10 m/2*0.75 $mm^2$ | 10 m/2*0.75 $mm^2$ | 10 m/2*0.75 $mm^2$ | 10 m/2*0.75 $mm^2$ | 7 m/2*0.75 $mm^2$ | - |
| | EVA. OUT | | Type/Φ | 103HW/7Φ | 103HW/7Φ | 103HW/7Φ | 103HW/7Φ | 103HW/7Φ | - |
| | | | $m/mm^2$ | 10 m/2*0.75 $mm^2$ | 10 m/2*0.75 $mm^2$ | 10 m/2*0.75 $mm^2$ | 10 m/2*0.75 $mm^2$ | 7 m/2*0.75 $mm^2$ | - |
| | Room | | Type/Φ | 103HW/Moulding | 103HW/Moulding | 103HW/Moulding | 103HW/Moulding | PT1000Ω/4~20 mA Field Supply | - |
| | | | $m/mm^2$ | 10 m/2*0.75 $mm^2$ | 10 m/2*0.75 $mm^2$ | 10 m/2*0.75 $mm^2$ | 10 m/2*0.75 $mm^2$ | - | - |
| | Discharge | | Type/Φ | 103HW/7Φ | 103HW/7Φ | 103HW/7Φ | 103HW/7Φ | PT1000Ω/4~20 mA Field Supply | - |
| | | | $m/mm^2$ | 10 m/2*0.75 $mm^2$ | 10 m/2*0.75 $mm^2$ | 10 m/2*0.75 $mm^2$ | 10 m/2*0.75 $mm^2$ | - | - |
| Refrigerant | Type | | | R410A | R410A | R410A | R410A | R410A | R410A |
| EEV Kit | Type | | | INCLUDED | INCLUDED | INCLUDED | INCLUDED | NOT INCLUDED | - |
| | EEV Wire Length | | m | 2 | 2 | 7 | 7 | - | 7 |
| | | | ft | 6.6 | 6.6 | 23.0 | 23.0 | - | 23.0 |
| External Dimensions | EEV Kit | (W x H x D) | mm | 415 x 102 x 170 | 415 x 102 x 170 | 415 x 102 x 170 | 415 x 102 x 170 | - | Accessory for MCM-D201N, ordered separately (1 per 10HP) |
| | Control Box | (W x H x D) | mm | 380 x 130 x 280 | 380 x 130 x 280 | 380 x 130 x 280 | 380 x 130 x 280 | 385 x 53 x 275 | - |

VRF

# VRF Chiller

# Line-up outdoor

| Model Type | Image | 42 kW | 56 kW | 65 kW |
|---|---|---|---|---|
| Non-Pump Model |  | AG042KSVANH/EU | AG056KSVANH/EU | AG070KSVANH/EU |

Combining modules allows each product to work at high capacity. You can combine up to 16 modules.

# Combination guide - outdoor

## Modulation guide

| Total Capacity (kW) | Model | | | Suggested ø water type controller piping |
|---|---|---|---|---|
| | AG042 | AG056 | AG070 | |
| 42 | 1 | | | 40 |
| 56 | | 1 | | 40 |
| 65 | | | 1 | 50 |
| 84 | 2 | | | 50 |
| 112 | | 2 | | 65 |
| 126 | 3 | | | 65 |
| 130 | | | 2 | 80 |
| 168 | | 3 | | 80 |
| 168 (high efficiency) | 4 | | | 80 |
| 195 | | | 3 | 80 |
| 210 | 5 | | | 80 |
| 224 | | 4 | | 100 |
| 252 | 6 | | | 100 |
| 260 | | | 4 | 100 |
| 280 | | 5 | | 100 |
| 294 | 7 | | | 100 |
| 325 | | | 5 | 100 |
| 336 | | 6 | | 100 |
| 336 (high efficiency) | 8 | | | 100 |
| 378 | 9 | | | 100 |
| 390 | | | 6 | 100 |
| 392 | | 7 | | 100 |
| 420 | 10 | | | 100 |
| 448 | | 8 | | 125 |

| Total Capacity (kW) | Model | | | Suggested ø water type controller piping |
|---|---|---|---|---|
| | AG042 | AG056 | AG070 | |
| 455 | | | 7 | 125 |
| 462 | 11 | | | 125 |
| 504 | | 9 | | 125 |
| 504 (high efficiency) | 12 | | | 125 |
| 520 | | | 8 | 125 |
| 546 | 13 | | | 125 |
| 560 | | 10 | | 125 |
| 585 | | | 9 | 125 |
| 588 | 14 | | | 125 |
| 616 | | 11 | | 125 |
| 630 | 15 | | | 125 |
| 650 | | | 10 | 125 |
| 672 | | 12 | | 125 |
| 672 (high efficiency) | 16 | | | 125 |
| 715 | | | 11 | 150 |
| 728 | | 13 | | 125 |
| 780 | | | 12 | 150 |
| 784 | | 14 | | 150 |
| 840 | | 15 | | 150 |
| 845 | | | 13 | 150 |
| 896 | | 16 | | 150 |
| 910 | | | 14 | 150 |
| 975 | | | 15 | 150 |
| 1,040 | | | 16 | 150 |



# Line-up indoor

| Model Type | Image | 1.9 kW | 2.6 kW | 3.0 kW | 4.2 kW | 6.0 kW | 7.2 kW | 7.8 kW | 9.0 kW | 10.0 kW |
|---|---|---|---|---|---|---|---|---|---|---|
| 1-Way Cassette FCU |  | | • | | • | • | | | | |
| 4-Way Cassette FCU |  | | | | | • | • | | • | • |
| 360 Cassette FCU |  | | | | | • | • | | • | • |
| Concealed FCU |  | | • | | • | • | | • | • | |
| Cased FCU |  | | • | | • | • | | • | • | |

Wind-Free™ 1-Way Cassette FCU is scheduled to be available by mid-2020.

# Selection guide



## Cassette





| Feature | 1-Way Cassette FCU | 4-Way Cassette FCU | 360 Cassette FCU |
|---|---|---|---|
| Cooling capacity range (nominal) | 2.6–4.15 kW | 6.0–10.0 kW | 6.0–10.0 kW |
| Heating capacity range (nominal) | 2.9–5.0 kW | 7.3–10.7 kW | 7.3–10.7 kW |
| Fan motor type | AC/BLDC | BLDC | BLDC |
| Drain Pump | Built-in | Built-in | Built-in |
| Filter | Microfibrous filter | Microfibrous filter | Microfibrous filter |
| 3-Way Valve | Optional | Optional | Optional |
| 2-pipe | ● | ● | ● |
| 4-pipe (optional) | | | |
| Installation | Horizontal | Horizontal | Horizontal |

## Concealed and Cased




| Feature | Concealed FCU | Cased FCU |
|---|---|---|
| Cooling capacity range (nominal) | 1.9–7.8 kW | 1.9–7.8 kW |
| Heating capacity range (nominal) | 2.1–8.4 kW | 2.1–8.4 kW |
| Fan motor type | 3-step AC | 3-step AC |
| Drain Pump | Optional | Optional |
| Filter | Polypropylene washable | Polypropylene washable |
| 3-Way Valve | Built-in | Built-in |
| 2-pipe | ● | ● |
| 4-pipe (optional) | ● | ● |
| Installation | Horizontal/vertical | Horizontal/vertical |





VRF Chiller

# Nomenclature

## Indoor units

| AG | 072 | M | N | 4 | P | K | H |
|---|---|---|---|---|---|---|---|
| 1 | 2 | 3 | 4 | 5 | 6 | 7 | 8 |

| | | | |
|---|---|---|---|
| 1 | **Classification** | **AG** | Chiller/Fan Coil Unit (FCU) |
| 2 | **Capacity** | **x1/10 kW (3 digits)** | |
| 3 | **Version** | **K** | 2016 |
| | | **M** | 2017 |
| | | **N** | 2018 |
| 4 | **Product Type** | **N** | Indoor Unit |
| 5 | **Product Notation** | **1** | 1-Way Cassette |
| | | **4** | 4-Way Cassette, 360 Cassette |
| 6 | **Feature** | **D** | Deluxe |
| | | **P** | Premium |
| 7 | **Voltage Rating** | **E** | 1Φ, 220~240 V, 50 Hz |
| | | **K** | 1Φ, 220~240 V, 50/60 Hz |
| 8 | **Mode** | **H** | Heat Pump |

## Indoor units (third party)

| ACL | 65 | D | F |
|---|---|---|---|
| 1 | 2 | 3 | 4 |

| | | | |
|---|---|---|---|
| 1 | **Classification** | **ACL** | Chiller/Fan Coil Unit (FCU) |
| 2 | **Capacity** | **x1/10 kW (3 digits)** | |
| 3 | **Product Notation** | **D** | 2-Pipe FCU |
| | | **Q** | 4-Pipe FCU |
| | | **A** | Accessory |
| 4 | **Product Type** | **F** | Concealed |
| | | **G** | Cased |

## Outdoor units

| AG | 070 | K | S | V | A | N | H |
|---|---|---|---|---|---|---|---|
| 1 | 2 | 3 | 4 | 5 | 6 | 7 | 8 |

| | | | |
|---|---|---|---|
| 1 | **Classification** | **AG** | Chiller (HVM Chiller) |
| 2 | **Capacity** | **kW (3 digits)** | |
| 3 | **Version** | **K** | 2016 |
| | | **M** | 2017 |
| | | **N** | 2018 |
| 4 | **Product Type** | **S** | SET HVM Chiller |
| 5 | **Product Notation** | **V** | Inverter |
| 6 | **Feature** | **A** | Non-pump |
| 7 | **Voltage Rating** | **N** | 3Φ, 380~415 V, 50/60 Hz |
| 8 | **Mode** | **H** | Heat Pump |





VRF Chiller

# Specifications

## HVM Chiller

- Air-cooled HVM Chiller Heat Pump.
- Option of connecting up to 16 modules for a total capacity of more than 1 MW.
- Capacity modulation between 15% and 100%.
- Each unit houses 2 Inverter Scroll compressors, all equipped with Flash Injection technology.





| Model Name | | | | AG042KSVANH/EU | AG056KSVANH/EU | AG070KSVANH/EU |
|---|---|---|---|---|---|---|
| Power Supply | | | Φ, #, V, Hz | 3Φ, 4, 380~415 V, 50/60 Hz | 3Φ, 4, 380~415 V, 50/60 Hz | 3Φ, 4, 380~415 V, 50/60 Hz |
| Performance | Capacity (Nominal) | Cooling | kW | 42 | 56 | 65 |
| | | Heating | kW | 42 | 56 | 70 |
| Power | Power Input (Nominal) | Cooling | kW | 12.4 | 18.7 | 26.0 |
| | | Heating | kW | 11.83 | 17.50 | 24.39 |
| | Current Input (Nominal) | Cooling | A | 19.6 | 29.6 | 41.2 |
| | | Heating | A | 18.8 | 27.8 | 38.7 |
| | Current | MCA | A | 32 | 46 | 58 |
| | | MFA | A | 40 | 60 | 75 |
| Efficiency | EER Nominal Cooling (pump input is not included) | | W/W | 3.4 | 3.0 | 2.5 |
| | COP Nominal Heating (pump input is not included) | | W/W | 3.6 | 3.2 | 2.9 |
| | ESEER (Pump input is not included) | | W/W | 5.7 | 5.4 | 5.0 |
| Fan | Type | | - | Axial Fan | Axial Fan | Axial Fan |
| | Number of Fans | | - | 2 | 2 | 2 |
| | Airflow Rate | | $m^3$/min | 364 (182 x 2) | 364 (182 x 2) | 392 (196 x 2) |
| | | | L/s | 6,067 | 6,067 | 6,535 |
| | External Static Pressure | Max. | mmAq | 8.00 | 8.00 | 8.00 |
| | | | Pa | 78.5 | 78.5 | 78.5 |
| Fan Motor | Type | | - | BLDC Motor | BLDC Motor | BLDC Motor |
| | Output x n | | W | 630 x 2 | 630 x 2 | 630 x 2 |
| Water Side Heat Exchanger | Type | | - | Brazing Plate | Brazing Plate | Brazing Plate |
| | Water Flow Rate (Cooling/Heating) | | L/min | 120/120 | 160/160 | 186/200 |
| | Pressure Drop (Set. Nominal) | | kPa | 60 | 100 | 120 |
| | Max. Operating Pressure | | MPa | 1 | 1 | 1 |
| | Connection Type | | - | FLANGE | FLANGE | FLANGE |
| | Pipe Connection (Inlet/Outlet) | | ø, mm | 40 | 40 | 50 |
| | | | ø, inch | 1 1/2 | 1 1/2 | 2 |
| | Quantity | | - | 2 | 2 | 2 |
| Wiring Connections | Communication | Min. | $mm^2$ | 0.75 | 0.75 | 0.75 |
| | | Remark | | F1, F2 | F1, F2 | F1, F2 |
| Refrigerant | Type | | - | R410A (GWP=2,088) which is a fluorinated greenhouse gas | | |
| | Factory Charging | | kg/t$CO_2$e | 18/37.58 | 18/37.58 | 18/37.58 |
| Sound 2 | Sound Pressure | Cooling | dB(A) | 60 | 62 | 63 |
| | | Heating | dB(A) | 57 | 59 | 64 |
| | Sound Power | | dB(A) | 80 | 83 | 85 |
| External Dimensions | Net Weight | | kg | 446.0 | 446.0 | 465.0 |
| | Net Dimensions (W x H x D) | | mm | 1,795 x 1,695 x 765 | 1,795 x 1,695 x 765 | 1,795 x 1,695 x 765 |
| Operating Water Temperature Range | Cooling | | °C | 5.0~25.0 | 5.0~25.0 | 5.0~25.0 |
| | Cooling (if using brine) | | °C | -10.0~25.0 | -10.0~25.0 | -10.0~25.0 |
| | Heating | | °C | 25.0~55.0 | 25.0~55.0 | 25.0~55.0 |
| Operating Water Flow Range | Water Flow Rate | | L/min | 60~240 | 80~320 | 93~400 |
| | Minimum Water Storage in the System | | L | 294 | 392 | 490 |
| Operating Ambient Temperature Range | Cooling | | °C | -15.0~48.0 | -15.0~48.0 | -15.0~48.0 |
| | Heating | | °C | -25.0~43.0 | -25.0~43.0 | -25.0~43.0 |

Accessories






| Module Controller | DMS2.5 | BACnet Gateway | Touch Centralised Controller |
|---|---|---|---|
| MCM-A00N | MIM-D01AN | MIM-B17BN | MCM-A300N |



# Dimensional drawings

## HVM Chiller

AG042/056/070KSVANH/EU

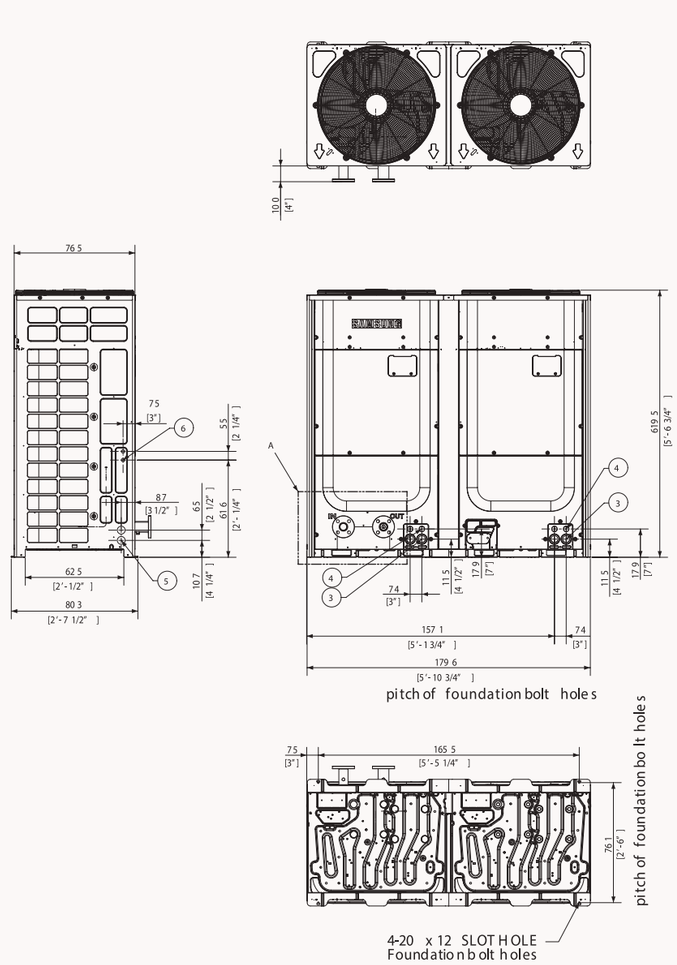


| NO | Name | Description |
|---|---|---|
| 1 | Inlet water flange | 15/20 hp 40A Din Flange, 25 hp: 50A Din Flange |
| 2 | Outlet water flange | 15/20 hp 40A Din Flange, 25 hp: 50A Din Flange |
| 3 | Power wiring conduits | Knock-out hole (front) |
| 4 | Communication wiring conduits | Knock-out hole (front) |
| 5 | Power wiring conduits | Knock-out hole (side) |
| 6 | Communication wiring conduits | Knock-out hole (side) |

# Specifications

## 1-Way Cassette FCU

- One-way air supply by means of a 100 mm wide blade.
- Cross-flow fan direct driven by a BLDC motor.
- Built-in condensation drain pump
- 3-Way valve kit (optional).
- Compatible with Wi-Fi Kit controller.





| Model | | | | AG026MN1DEH/EU | AG032MN1DEH/EU | AG042MN1DEH/EU |
|---|---|---|---|---|---|---|
| Power Supply | | | Φ, V, Hz | 1Φ, 220~240 V, 50 Hz | 1Φ, 220~240 V, 50 Hz | 1Φ, 220~240 V, 50 Hz |
| Mode | | | - | HP | HP | HP |
| Performance | Capacity (Nominal) | Cooling | kW | 2.60 | 3.00 | 4.15 |
| | | Heating | kW | 2.90 | 3.35 | 5.00 |
| Power | Power Input (Nominal) | Cooling | W | 47 | 50 | 55 |
| | | Heating | W | 47 | 50 | 55 |
| | Current Input (Nominal) | Cooling | A | 0.24 | 0.26 | 0.29 |
| | | Heating | A | 0.24 | 0.26 | 0.29 |
| Heat Exchanger | Type | | - | Fin & tube | Fin & tube | Fin & tube |
| Fan | Type | | - | Crossflow fan | Crossflow fan | Crossflow fan |
| | Number of Fans | | - | 1 | 1 | 1 |
| | Airflow Rate | H/M/L | m³/min | 6.8/5.8/4.9 | 7.8/6.8/4.9 | 14.6/12.6/10.7 |
| Fan Motor | Type | | - | AC | AC | BLDC |
| | Output x n | | W | 12 x 1 | 12 x 1 | 54 x 1 |
| Water | Water Flow Rate | Cooling | L/min | 7.5 | 9.6 | 11.9 |
| | Water Flow Rate | Heating | L/min | 8.4 | 9.7 | 14.4 |
| | Pressure Drop | Cooling | kPa | 23.0 | 34.5 | 45.0 |
| | Pressure Drop | Heating | kPa | 28.0 | 35.8 | 64.6 |
| Piping Connections | Liquid Pipe (IN) | | Type | PF MALE | PF MALE | PF MALE |
| | | | ø, mm (inch) | 20A (3/4) | 20A (3/4) | 20A (3/4) |
| | Liquid Pipe (OUT) | | Type | PF MALE | PF MALE | PF MALE |
| | | | ø, mm (inch) | 20A (3/4) | 20A (3/4) | 20A (3/4) |
| | Heat Insulation | | - | Both inlet/outlet pipes | Both inlet/outlet pipes | Both inlet/outlet pipes |
| | Drain Pipe | | ø, mm | VP20 (OD 26, ID 20) | VP20 (OD 26, ID 20) | VP25 (OD 32, ID 25) |
| Sound | Sound Pressure | (H/M/L) | dB(A) | 32/30/28 | 37/33/28 | 40/37/33 |
| | Sound Power | Cooling | dB(A) | 49 | 52 | 58 |
| Dimensions | Net Weight | | kg | 10.5 | 10.5 | 14.0 |
| | Net Dimensions (W × H × D) | | mm | 970 x 135 x 410 | 970 x 135 x 410 | 1,200 x 138 x 450 |
| Casing | Material | | - | Plastic | Plastic | Plastic |
| Panel | Panel Model | | - | PC1NUSMAN | PC1NUSMAN | PC1BWSMAN |
| Additional Accessories | Drain Pump | Type | - | Built-in | Built-in | Built-in |
| | | Max. Lifting Height/ Displacement | mm/(cc/ min) | 750/400 | 750/400 | 750/400 |
| | 3-Way Valve Kit (optional) | | | ACL-A60V3 | ACL-A60V3 | ACL-A60V3 |
| | Filter | | - | Microfibrous filter | Microfibrous filter | Microfibrous filter |

### Accessories











| Panel (Optional) | Panel (Optional) | FCU Interface Module | FCU Kit | Wireless Remote Controller | Simple Type Controller | Touch Controller | Wired Remote Controller | Wired Remote Controller |
|---|---|---|---|---|---|---|---|---|
| PC1BWSMAN | PC1NUSMAN | MIM-F10N | MIM-F00N | AR-EH03E | MWR-SH00N | MWR-SH11N | MWR-WE13N | MWR-WG00*N |

Cooling: Indoor temperature 27 °C DB, 19 °C WB/Water In/Out temperature 7 °C, 12 °C Heating: Indoor temperature 20 °C DB, 15 °C WB/Water In/Out temperature 45 °C, 40 °C.
Sound level was acquired in an anechoic room. Thus actual noise level may be different depending on the installation conditions.
Specifications may be subject to change without prior notice.
Select wire size based on the MCA value.



# Dimensional drawings

## 1-Way Cassette FCU

AG026/032MN1DEH/EU

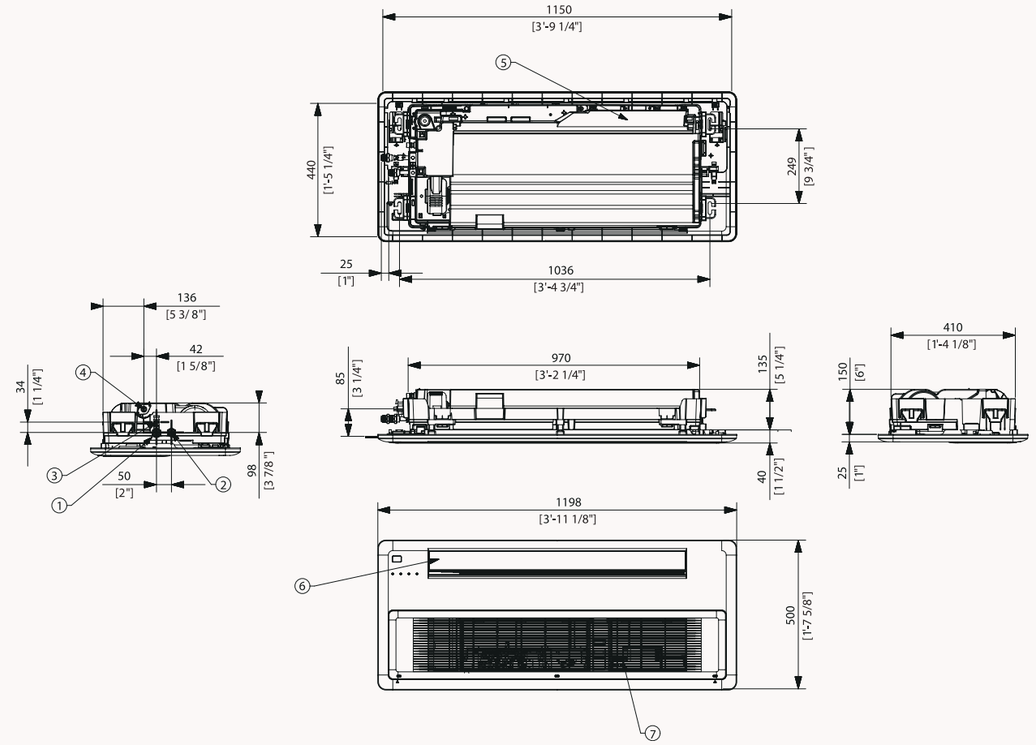


| NO | Name | Description |
|---|---|---|
| 1 | Water pipe connection out | PF Male 3/4 (20A) |
| 2 | Water pipe connection in | PF Male 3/4 (20A) |
| 3 | Air vent valve | |
| 4 | Drain hose | VP20 (OD 26, ID 20) |
| 5 | Power supply/communication wiring conduits | |
| 6 | Air discharge part | |
| 7 | Air suction part | |

# Dimensional drawings

## 1-Way Cassette FCU

**AG026/032MN1DEH/EU**

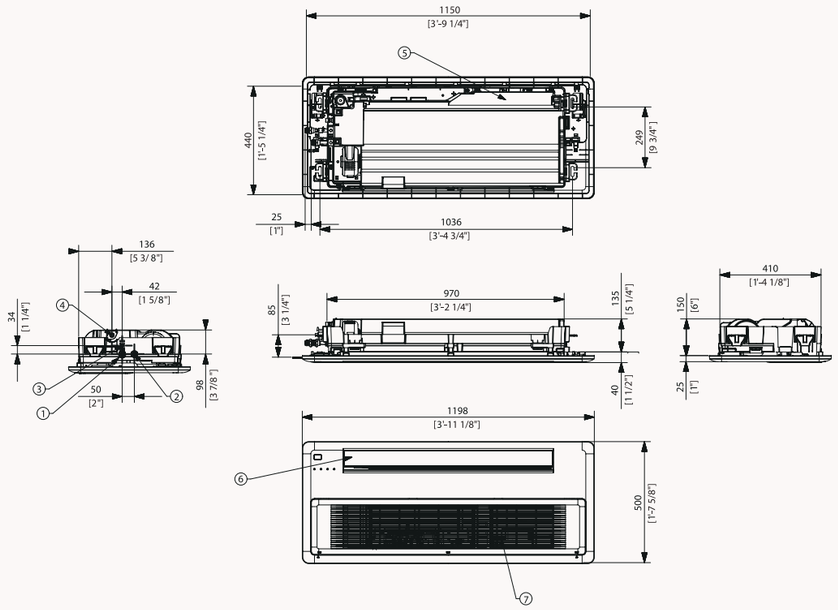


**AG042MN1DEH/EU**

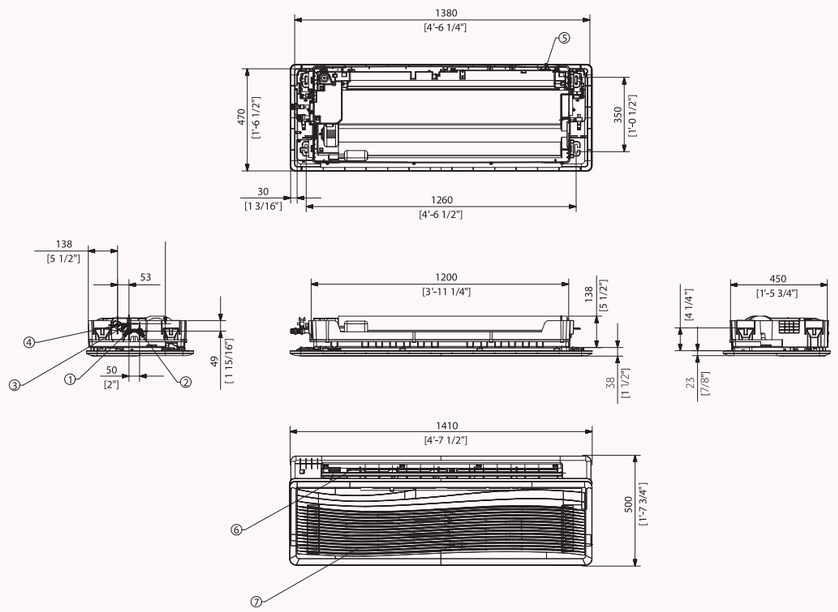

# Specifications

## 4-Way Cassette FCU

- Four-way air supply via independently adjustable blades.
- Direct drive fan powered by a BLDC motor.
- Built-in condensation drain pump.
- 3-Way valve kit (optional).
- Compatible with Wi-Fi Kit controller.
- Motion Detect Sensor (optional).



| Model | | | | AG060MN4DKH/EU | AG072MN4DKH/EU | AG090MN4DKH/EU | AG105MN4DKH/EU |
|---|---|---|---|---|---|---|---|
| Power Supply | | | Φ, V, Hz | 1Φ, 220~240 V, 50/60 Hz | 1Φ, 220~240 V, 50/60 Hz | 1Φ, 220~240 V, 50/60 Hz | 1Φ, 220~240 V, 50/60 Hz |
| Mode | | | - | HP | HP | HP | HP |
| Performance | Capacity (Nominal) | Cooling | kW | 6.0 | 7.2 | 9.0 | 10.0 |
| | | Heating | kW | 7.3 | 8.5 | 10.0 | 10.7 |
| Power | Power Input (Nominal) | Cooling | W | 50 | 73 | 82 | 99 |
| | | Heating | W | 50 | 73 | 82 | 99 |
| | Current Input (Nominal) | Cooling | A | 0.37 | 0.50 | 0.58 | 0.79 |
| | | Heating | A | 0.37 | 0.5 | 0.58 | 0.79 |
| Fan | Type | | - | Fin & tube | Fin & tube | Fin & tube | Fin & tube |
| | Type | | - | Turbo Fan | Turbo Fan | Turbo Fan | Turbo Fan |
| | Number of Fans | | - | 1 | 1 | 1 | 1 |
| | Airflow Rate | H/M/L | $m^3$/min | 18.9/16.5/13.6 | 21.3/18.2/13.6 | 23.3/21.3/19.4 | 30.1/26.2/19.4 |
| Fan Motor | Type | | - | BLDC | BLDC | BLDC | BLDC |
| | Output x n | | W | 65 x 1 | 65 x 1 | 65 x 1 | 97 x 1 |
| Water | Water Flow Rate | Cooling | L/min | 17.5 | 20.8 | 26.0 | 28.9 |
| | Water Flow Rate | Heating | L/min | 21.1 | 24.5 | 28.9 | 30.9 |
| | Pressure Drop | Cooling | kPa | 27.0 | 36.0 | 46.8 | 56.3 |
| | Pressure Drop | Heating | kPa | 37.3 | 48.6 | 56.3 | 63.4 |
| Piping Connections | Liquid Pipe (IN) | | Type | PF MALE | PF MALE | PF MALE | PF MALE |
| | | | ø, mm (inch) | 20A (3/4) | 20A (3/4) | 20A (3/4) | 20A (3/4) |
| | Liquid Pipe (OUT) | | Type | PF MALE | PF MALE | PF MALE | PF MALE |
| | | | ø, mm (inch) | 20A (3/4) | 20A (3/4) | 20A (3/4) | 20A (3/4) |
| | Heat Insulation | | - | Both inlet/outlet pipes | Both inlet/outlet pipes | Both inlet/outlet pipes | Both inlet/outlet pipes |
| | Drain Pipe | | ø, mm | VP25 (OD 32, ID 25) | VP25 (OD 32, ID 25) | VP25 (OD 32, ID 25) | VP25 (OD 32, ID 25) |
| Sound | Sound Pressure | (H/M/L) | dB(A) | 37/33/30 | 41/35/30 | 42/38/35 | 45/40/35 |
| | Sound Power | Cooling | dB(A) | 56 | 60 | 58 | 60 |
| Dimensions | Net Weight | | kg | 15.5 | 15.5 | 18.0 | 18.0 |
| | Net Dimensions (W × H × D) | | mm | 840 x 204 x 840 | 840 x 204 x 840 | 840 × 246 × 840 | 840 × 246 × 840 |
| Panel | Panel Model | | - | PC4NUSKAN<br>PC4NUSKEN | PC4NUSKAN<br>PC4NUSKEN | PC4NUSKAN<br>PC4NUSKEN | PC4NUSKAN<br>PC4NUSKEN |
| | | | | PC4NBSKAN | PC4NBSKAN | PC4NBSKAN | PC4NBSKAN |
| Additional Accessories | Drain Pump | Type | - | Built-in | Built-in | Built-in | Built-in |
| | | Max. Lifting Height/ Displacement | mm/(cc/ min) | 750/400 | 750/400 | 750/400 | 750/400 |
| | 3-Way Valve Kit (optional) | | | ACL-A60V3 | ACL-A60V3 | ACL-A60V3 | ACL-A60V3 |
| | Filter | | - | Microfibrous filter | Microfibrous filter | Microfibrous filter | Microfibrous filter |

### Accessories












| Panel (Optional) | Panel (Optional) | Panel (Optional) | FCU Interface Module | FCU Kit | Wireless Remote Controller | Simple Type Controller | Touch Controller | Wired Remote Controller | Wired Remote Controller |
|---|---|---|---|---|---|---|---|---|---|
| PC4NBSKAN | PC4NUSKAN | PC4NUSKEN | MIM-F10N | MIM-F00N | AR-EH03E | MWR-SH00N | MWR-SH11N | MWR-WE13N | MWR-WG00*N |

Cooling: Indoor temperature 27 °C DB, 19 °C WB/Water In/Out temperature 7 °C, 12 °C Heating: Indoor temperature 20 °C DB, 15 °C WB/Water In/Out temperature 45 °C, 40 °C.
Sound level was acquired in an anechoic room. Thus actual noise level may be different depending on the installation conditions.
Specifications may be subject to change without prior notice.
Select wire size based on the MCA value.



# Dimensional drawings

## 4-Way Cassette FCU

AG060/072/090/105MN4DKH/EU

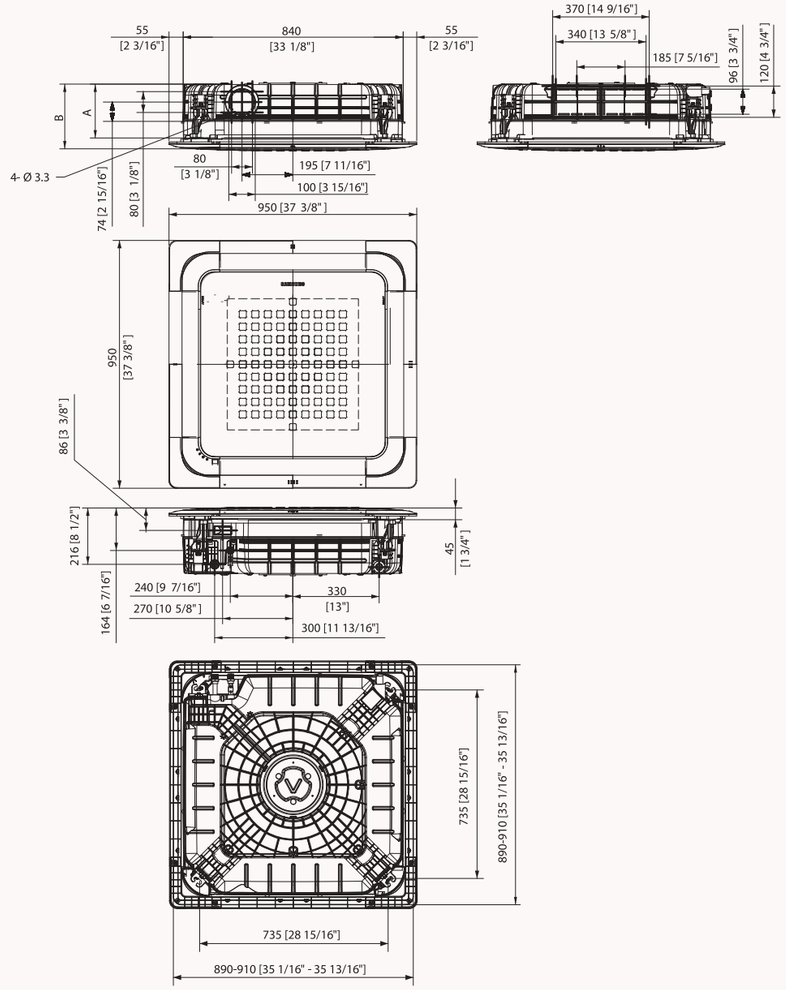


| Pos. | Name | Description |
|---|---|---|
| Model | AG060MN4DKH/EU | AG090MN4DKH/EU |
| | AG072MN4DKH/EU | AG105MN4DKH/EU |
| | 204 [8 1/16] | 246 [9 11/16] |
| A | 253 [9 15/16] | 295 [11 5/8] |
| A | 205 | 289 |
| Pipe connection | PF 3/4 Male | |
| Drain pipe connection | VP25 (OD 32, ID 25) | |



VRF Chiller

# Specifications

## 360 Cassette FCU

- 360 degree air supply.
- Bladeless discharge. Booster fans can be individually controlled, allowing for completely horizontal flow discharge. Coandă effect is created even without ceiling.
- 3-Way valve kit (optional).
- Built-in condensation drain pump.
- Predisposition of the air inlet to let fresh air in.
- Compatible with Wi-Fi Kit controller.
- Circular or square cassette panel.



| Model | | | | AG060MN4PKH/EU | AG072MN4PKH/EU | AG090MN4PKH/EU | AG105MN4PKH/EU |
|---|---|---|---|---|---|---|---|
| Power Supply | | | Φ, V, Hz | 1Φ, 220~240 V, 50/60 Hz | 1Φ, 220~240 V, 50/60 Hz | 1Φ, 220~240 V, 50/60 Hz | 1Φ, 220~240 V, 50/60 Hz |
| Mode | | | - | HP | HP | HP | HP |
| Performance | Capacity (Nominal) | Cooling | kW | 6.0 | 7.2 | 9.0 | 10.0 |
| | | Heating | kW | 7.3 | 8.5 | 10.0 | 10.7 |
| Power | Power Input (Nominal) | Cooling | W | 58 | 58 | 77 | 100 |
| | | Heating | W | 58 | 58 | 77 | 100 |
| | Current Input (Nominal) | Cooling | A | 0.50 | 0.50 | 0.62 | 0.79 |
| | | Heating | A | 0.50 | 0.50 | 0.62 | 0.79 |
| Heat Exchanger | Type | | - | Fin & tube | Fin & tube | Fin & tube | Fin & tube |
| Fan | Type | | - | Turbo Fan | Turbo Fan | Turbo Fan | Turbo Fan |
| | Number of Fans | | - | 1 | 1 | 1 | 1 |
| | Airflow Rate | H/M/L | $m^3$/min | 21.0/17.5/15.0 | 25.5/22.0/19.8 | 29.5/24.0/19.8 | 31.5/22.5/19.8 |
| Fan Motor | Type | | - | BLDC | BLDC | BLDC | BLDC |
| | Output x n | | W | 65 x 1 | 97 x 1 | 97 x 1 | 97 x 1 |
| Water | Water Flow Rate | Cooling | L/min | 17.5 | 20.8 | 26.0 | 28.9 |
| | Water Flow Rate | Heating | L/min | 21.1 | 24.5 | 28.9 | 30.9 |
| | Pressure Drop | Cooling | kPa | 27.0 | 26.0 | 38.5 | 47.4 |
| | Pressure Drop | Heating | kPa | 37.6 | 35.6 | 47.4 | 53.2 |
| Piping Connections | Liquid Pipe (IN) | | Type | PF MALE | PF MALE | PF MALE | PF MALE |
| | | | ø, mm (inch) | 20A (3/4) | 20A (3/4) | 20A (3/4) | 20A (3/4) |
| | Liquid Pipe (OUT) | | Type | PF MALE | PF MALE | PF MALE | PF MALE |
| | | | ø, mm (inch) | 20A (3/4) | 20A (3/4) | 20A (3/4) | 20A (3/4) |
| | Heat Insulation | | - | Both inlet/outlet pipes | Both inlet/outlet pipes | Both inlet/outlet pipes | Both inlet/outlet pipes |
| | Drain Pipe | | ø, mm | VP25 (OD 32, ID 25) | VP25 (OD 32, ID 25) | VP25 (OD 32, ID 25) | VP25 (OD 32, ID 25) |
| Sound | Sound Pressure | (H/M/L) | dB(A) | 40/37/32 | 39/35/33 | 43/38/33 | 45/39/33 |
| | Sound Power | Cooling | dB(A) | 57 | 58 | 60 | 62 |
| Dimensions | Net Weight | | kg | 21.0 | 25.0 | 25.0 | 25.0 |
| | Net Dimensions (W × H × D) | | mm | 947 x 281 x 947 | 947 x 365 x 947 | 947 x 365 x 947 | 947 x 365 x 947 |
| Casing | Material | | - | | | | |
| Panel | Panel Model | | - | PC4NUDMAN | PC4NUDMAN | PC4NUDMAN | PC4NUDMAN |
| | | | | PC4NUNMAN | PC4NUNMAN | PC4NUNMAN | PC4NUNMAN |
| Additional Accessories | Drain Pump | Type | - | Built-in | Built-in | Built-in | Built-in |
| | | Max. Lifting Height/ Displacement | mm/(cc/ min) | 750/400 | 750/400 | 750/400 | 750/400 |
| | | 3-Way Valve Kit | (optional) | ACL-A60V3 | ACL-A60V3 | ACL-A60V3 | ACL-A60V3 |
| | Filter | | - | Microfibrous filter | Microfibrous filter | Microfibrous filter | Microfibrous filter |

Accessories



| Panel (Optional) | Panel (Optional) | Panel (Optional) | Panel (Optional) | FCU Interface Module | FCU Kit | Wireless Remote Controller | Touch Controller | Wired Remote Controller | Wired Remote Controller |
|---|---|---|---|---|---|---|---|---|---|
| PC4NBDMAN | PC4NBNMAN | PC4NUDMAN | PC4NUNMAN | MIM-F10N | MIM-F00N | AR-EH03E | MWR-SH11N | MWR-WE13N | MWR-WG00*N |

Cooling: Indoor temperature 27 °C DB, 19 °C WB/Water In/Out temperature 7 °C, 12 °C Heating: Indoor temperature 20 °C DB, 15 °C WB/Water In/Out temperature 45 °C, 40 °C.
Sound level was acquired in an anechoic room. Thus actual noise level may be different depending on the installation conditions.
Specifications may be subject to change without prior notice.
Select wire size based on the MCA value.



# Dimensional drawings

## 360 Cassette FCU

AG060/072/090/105MN4PKH/EU

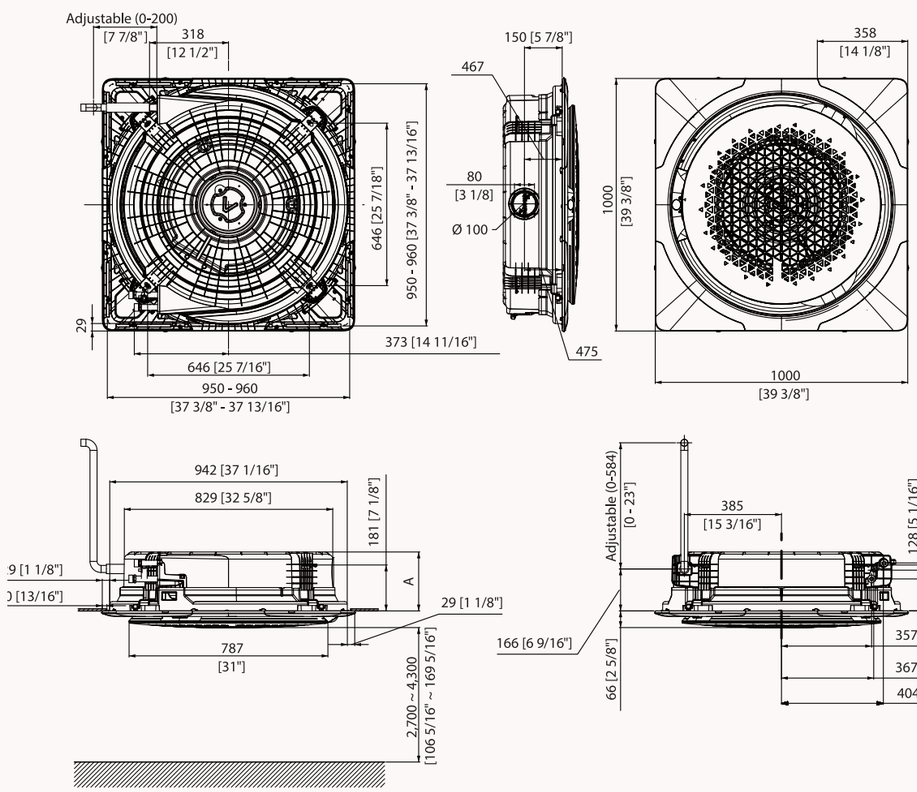


| Pos. | A Type | B Type |
|---|---|---|
| Model | AG060MN4PKH/EU | AG072MN4PKH/EU |
| | | AG090MN4PKH/EU |
| | | AG105MN4PKH/EU |
| A | 233 [9 3/16] | 317 [12 1/2] |
| Pipe connection | PF 3/4 Male | |
| Drain pipe connection | VP25 (OD 32, ID 25) | |

# Dimensional drawings

## 360 Cassette FCU

**AG060/072/090/105MN4PKH/EU**

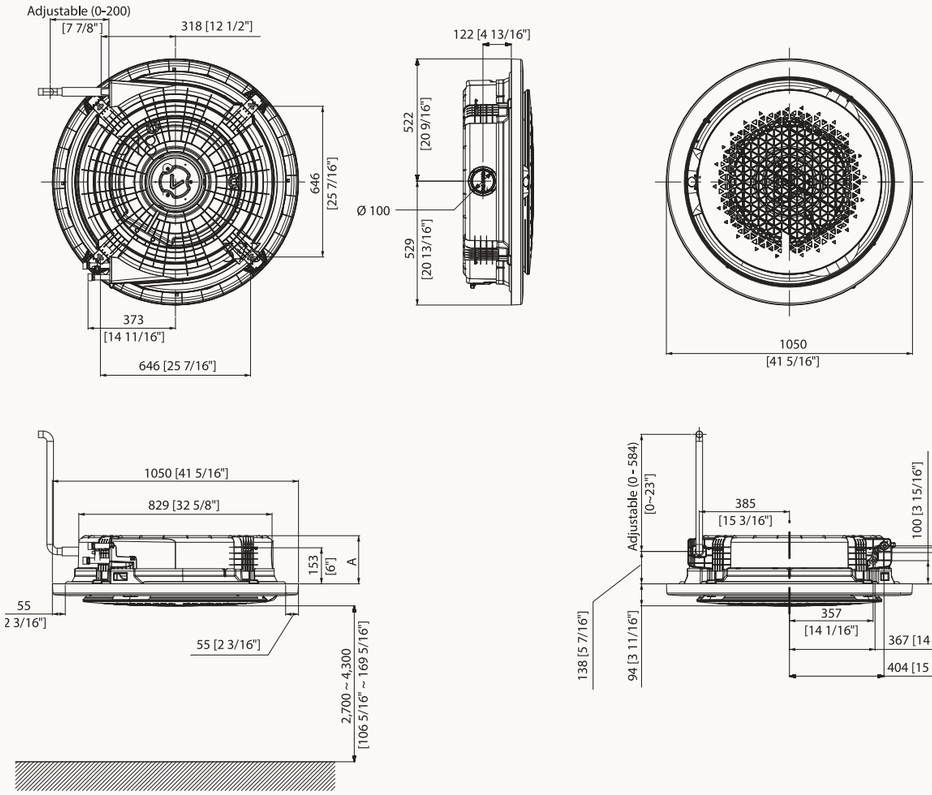


| Pos. | A Type | B Type |
|---|---|---|
| **Model** | AG060MN4PKH/EU | AG072MN4PKH/EU |
| | | AG090MN4PKH/EU |
| | | AG105MN4PKH/EU |
| **A** | 205 | 289 |
| **Pipe connection** | PF 3/4 Male | |
| **Drain pipe connection** | VP25 (OD 32, ID 25) | |








VRF Chiller

# Specifications

## Concealed FCU

- Plug & play solution in combination with HVM Chiller.
- Optional vertical or horizontal installation
- 3-Way valve kit included as standard.







| Model | | | | ACL-18DF | ACL-25DF | ACL-35DF | ACL-55DF | ACL-65DF |
|---|---|---|---|---|---|---|---|---|
| Power Supply | | | Φ, V, Hz | 1Φ, 220~240 V, 50/60 Hz | 1Φ, 220~240 V, 50/60 Hz | 1Φ, 220~240 V, 50/60 Hz | 1Φ, 220~240 V, 50/60 Hz | 1Φ, 220~240 V, 50/60 Hz |
| Mode | | | - | HP | HP | HP | HP | HP |
| Performance | Capacity (Nominal) | Cooling (H/M/L) | kW | 1.91/1.66/1.34 | 2.87/2.34/1.73 | 4.24/3.20/2.47 | 7.19/5.69/4.32 | 7.78/6.07/4.00 |
| | | Heating (H/M/L) | kW | 2.15/1.81/1.50 | 2.91/2.35/1.73 | 4.24/3.24/2.47 | 7.19/5.69/4.32 | 8.37/6.53/4.39 |
| Power | Power Input (Nominal) | Cooling (H/M/L) | W | 53/36/24 | 56/43/29 | 90/50/40 | 182/127/86 | 244/169/109 |
| | | Heating (H/M/L) | W | 53/36/24 | 56/43/29 | 90/50/40 | 182/127/86 | 244/169/109 |
| | Current Input (Nominal) | Cooling | A | 0.26 | 0.28 | 0.45 | 0.90 | 1.20 |
| | | Heating | A | 0.26 | 0.28 | 0.45 | 0.90 | 1.20 |
| Heat Exchanger | Type | | - | Fin & tube | Fin & tube | Fin & tube | Fin & tube | Fin & tube |
| Fan | Type | | - | Double suction centrifugal fan | Double suction centrifugal fan | Double suction centrifugal fan | Double suction centrifugal fan | Double suction centrifugal fan |
| | Number of Fans | | - | 2 | 2 | 2 | 3 | 3 |
| | Airflow Rate | H/M/L | $m^3$/min | 5.7/4.5/3.5 | 7.6/5.7/4.0 | 11.7/8.3/6.0 | 16.8/12.8/9.5 | 23.2/17.0/10.7 |
| Fan Motor | Type | | - | 3-step AC | 3-step AC | 3-step AC | 3-step AC | 3-step AC |
| | Output x n | | W | 53/36/24 | 56/43/29 | 90/50/40 | 182/127/86 | 244/169/109 |
| Water | Water Flow Rate | Cooling | l/min | 5.6 | 8.4 | 12.4 | 21.1 | 22.9 |
| | | Heating | l/min | 6.2 | 8.4 | 12.4 | 20.2 | 24.2 |
| | Pressure Drop | Cooling | kPa | 17 | 24 | 35 | 39 | 42 |
| | | Heating | kPa | 20 | 24 | 35 | 35 | 47 |
| Piping Connections | Liquid Pipe (IN) | Type | | Female | Female | Female | Female | Female |
| | | Dimension | ø, mm (inch) | 1/2 | 1/2 | 1/2 | 3/4 | 3/4 |
| | Liquid Pipe (OUT) | Type | | Female | Female | Female | Female | Female |
| | | Dimension | ø, mm (inch) | 1/2 | 1/2 | 1/2 | 3/4 | 3/4 |
| | Heat Insulation | | - | - | - | - | | |
| | Drain Pipe | | ø, mm | - | - | - | | |
| Sound | Sound Pressure | (H/M/L) | dB(A) | 42/36/32 | 40/34/28 | 45/35/27 | 53/46/39 | 59/52/41 |
| | Sound Power | (H/M/L) | dB(A) | 50/44/40 | 48/42/36 | 53/43/35 | 61/54/47 | 67/60/49 |
| Dimensions | Net Weight | | kg | 18.0 | 23.0 | 27.0 | 37.0 | 37.0 |
| | Net Dimensions (W × H × D) | | mm | 725 x 224 x 535 | 935 x 224 x 535 | 1,145 x 224 x 535 | 1,355 x 249 x 535 | 1,355 x 249 x 535 |
| Casing | Material | | - | | | | | |
| Panel | Panel Model | | - | | | | | |
| Additional Accessories | Drain Pump | Type | optional | ACL-ADP | ACL-ADP | ACL-ADP | ACL-ADP | ACL-ADP |
| | | Max. Lifting Height/Displacement | mm/ (cc/min) | 750/133 | 750/133 | 750/133 | 750/133 | 750/133 |
| | Heating Coil | 4-pipe | optional | ACL-A018HC | ACL-A025HC | ACL-A035HC | ACL-A055HC | ACL-A055HC |
| | 3-Way Valve | 4-pipe | optional | ACL-A018V3 | ACL-A018V3 | ACL-A018V3 | ACL-A055V3 | ACL-A055V3 |
| | Auxiliary Drain Pan | Vertical | optional | ACL-ADV | ACL-ADV | ACL-ADV | ACL-ADV | ACL-ADV |
| | | Horizontal | optional | ACL-ADH | ACL-ADH | ACL-ADH | ACL-ADH | ACL-ADH |
| | Filter | | | Polypropylene washable | Polypropylene washable | Polypropylene washable | Polypropylene washable | Polypropylene washable |

Accessories







| FCU Interface Module | FCU Kit | Touch Controller | Wired Remote Controller | Wired Remote Controller |
|---|---|---|---|---|
| MIM-F10N | MIM-F00N | MWR-SH11N | MWR-WE13N | MWR-WG00*N |

Cooling: Indoor temperature 27 °C DB, 19 °C WB/Water In/Out temperature 7 °C, 12 °C Heating: Indoor temperature 20 °C DB, 15 °C WB/Water In/Out temperature 45 °C, 40 °C.
Sound level was acquired in an anechoic room. Thus actual noise level may be different depending on the installation conditions.
Specifications may be subject to change without prior notice.
Select wire size based on the MCA value.





VRF Chiller

# Dimensional drawings

## Concealed FCU

ACL-**DF

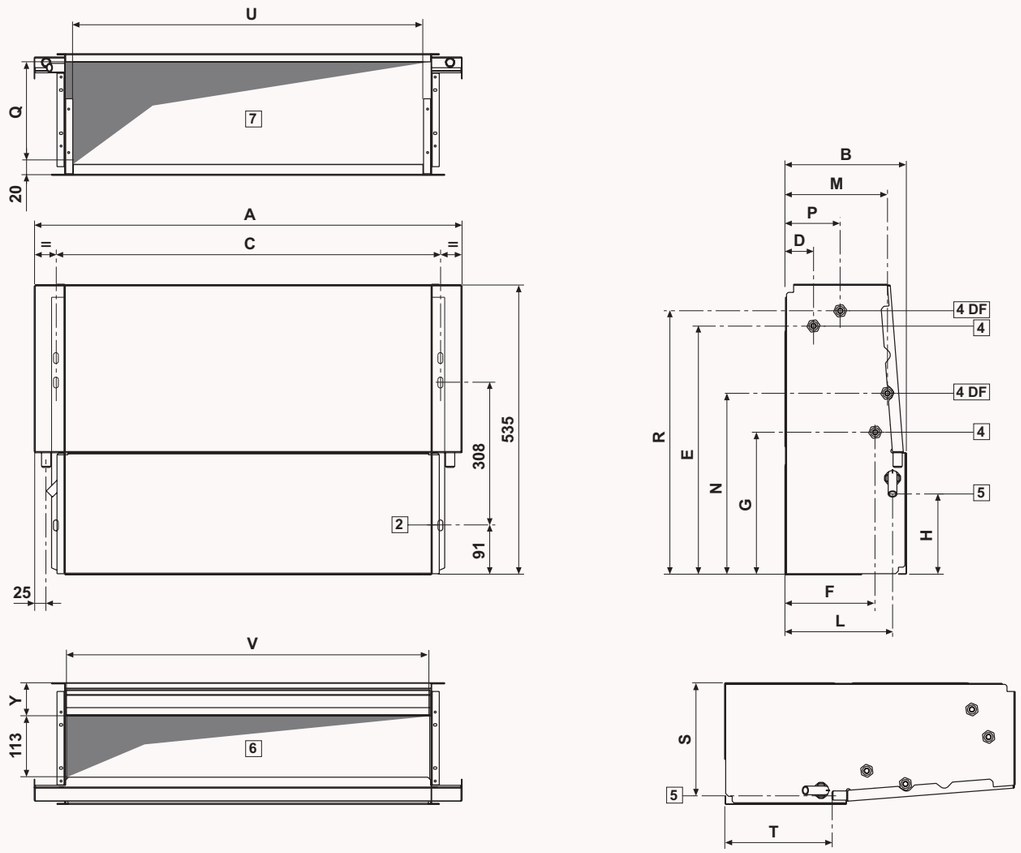


| NO | Name | Description |
|---|---|---|
| 1 | Water pipe connection out | PF Male 3/4 (20A) |
| 2 | Water pipe connection in | PF Male 3/4 (20A) |
| 3 | Air vent valve | |
| 4 | Drain hose | VP25 (OD 32, ID 25) |
| 5 | Power supply/communication wiring conduits | |
| 6 | Air discharge part | |
| 7 | Air suction part | |

| MODEL | A | B | C | H | L | S | T | Y |
|---|---|---|---|---|---|---|---|---|
| ACL-18DH | 584 | 224 | 498 | 149 | 198 | 208 | 198 | 61 |
| ACL-25DH | 794 | 224 | 708 | 149 | 198 | 208 | 198 | 61 |
| ACL-35DH | 1004 | 224 | 918 | 149 | 198 | 208 | 198 | 61 |
| ACL-55DH | 1214 | 249 | 1128 | 155 | 220 | 234 | 208 | 67 |
| ACL-65DH | 1214 | 249 | 1128 | 155 | 220 | 234 | 208 | 67 |






VRF Chiller

# Specifications

## Cased FCU

- Plug & play solution in combination with HVM Chiller.
- Optional vertical or horizontal installation
- 3-Way valve kit included as standard.







| Model | | | | ACL-18DG | ACL-25DG | ACL-35DG | ACL-55DG | ACL-65DG |
|---|---|---|---|---|---|---|---|---|
| Power Supply | | | Φ, V, Hz | 1Φ, 220~240 V, 50/60 Hz | 1Φ, 220~240 V, 50/60 Hz | 1Φ, 220~240 V, 50/60 Hz | 1Φ, 220~240 V, 50/60 Hz | 1Φ, 220~240 V, 50/60 Hz |
| Mode | | | - | HP | HP | HP | HP | HP |
| Performance | Capacity (Nominal) | Cooling (H/M/L) | kW | 1.91/1.66/1.34 | 2.87/2.34/1.73 | 4.24/3.20/2.47 | 7.19/5.69/4.32 | 7.78/6.07/4.00 |
| | | Heating (H/M/L) | kW | 2.15/1.81/1.50 | 2.91/2.35/1.73 | 4.24/3.24/2.47 | 7.19/5.69/4.32 | 8.37/6.53/4.39 |
| Power | Power Input (Nominal) | Cooling (H/M/L) | W | 53/36/24 | 56/43/29 | 90/50/40 | 182/127/86 | 244/169/109 |
| | | Heating (H/M/L) | W | 53/36/24 | 56/43/29 | 90/50/40 | 182/127/86 | 244/169/109 |
| | Current Input (Nominal) | Cooling | A | 0.26 | 0.28 | 0.45 | 0.90 | 1.20 |
| | | Heating | A | 0.26 | 0.28 | 0.45 | 0.90 | 1.20 |
| Heat Exchanger | Type | | - | Fin & tube | Fin & tube | Fin & tube | Fin & tube | Fin & tube |
| Fan | Type | | - | Double suction centrifugal fan | Double suction centrifugal fan | Double suction centrifugal fan | Double suction centrifugal fan | Double suction centrifugal fan |
| | Number of Fans | | - | 2 | 2 | 2 | 3 | 3 |
| | Airflow Rate | H/M/L | $m^3$/min | 5.7/4.5/3.5 | 7.6/5.7/4.0 | 11.7/8.3/6.0 | 16.8/12.8/9.5 | 23.2/17.0/10.7 |
| Fan Motor | Type | | - | 3-step AC | 3-step AC | 3-step AC | 3-step AC | 3-step AC |
| | Output x n | | W | 53/36/24 | 56/43/29 | 90/50/40 | 182/127/86 | 244/169/109 |
| Water | Water Flow Rate | Cooling | l/min | 5.6 | 8.4 | 12.4 | 21.1 | 22.9 |
| | | Heating | l/min | 6.2 | 8.4 | 12.4 | 20.2 | 24.2 |
| | Pressure Drop | Cooling | kPa | 17 | 24 | 35 | 39 | 42 |
| | | Heating | kPa | 20 | 24 | 35 | 35 | 47 |
| Piping Connections | Liquid Pipe (IN) | Type | | Female | Female | Female | Female | Female |
| | | Dimension | ø, mm (inch) | 1/2 | 1/2 | 1/2 | 3/4 | 3/4 |
| | Liquid Pipe (OUT) | Type | | Female | Female | Female | Female | Female |
| | | Dimension | ø, mm (inch) | 1/2 | 1/2 | 1/2 | 3/4 | 3/4 |
| | Heat Insulation | | - | - | - | - | - | - |
| | Drain Pipe | | ø, mm | - | - | - | - | - |
| Sound | Sound Pressure | (H/M/L) | dB(A) | 42/36/32 | 40/34/28 | 45/35/27 | 53/46/39 | 59/52/41 |
| | Sound Power | (H/M/L) | dB(A) | 50/44/40 | 48/42/36 | 53/43/35 | 61/54/47 | 67/60/49 |
| Dimensions | Net Weight | | kg | 22.0 | 29.0 | 35.0 | 45.0 | 45.0 |
| | Net Dimensions (W x H x D) | | mm | 774x564x226 | 984x564x226 | 1,194x564x226 | 1,404x564x251 | 1,404x564x251 |
| Casing | Material | | - | - | - | - | - | - |
| Panel | Panel Model | | - | - | - | - | - | - |
| Additional Accessories | Drain Pump | Type | optional | ACL-ADP | ACL-ADP | ACL-ADP | ACL-ADP | ACL-ADP |
| | | Max. Lifting Height/Displacement | mm / (cc/min) | 750/133 | 750/133 | 750/133 | 750/133 | 750/133 |
| | Heating Coil | 4-pipe | optional | ACL-A018HC | ACL-A025HC | ACL-A035HC | ACL-A055HC | ACL-A055HC |
| | 3-Way Valve | 4-pipe | optional | ACL-A018V3 | ACL-A018V3 | ACL-A018V3 | ACL-A055V3 | ACL-A055V3 |
| | Auxiliary Drain Pan | Vertical | optional | ACL-ADV | ACL-ADV | ACL-ADV | ACL-ADV | ACL-ADV |
| | Auxiliary Drain Pan | Horizontal | optional | ACL-ADH | ACL-ADH | ACL-ADH | ACL-ADH | ACL-ADH |
| | Filter | | | Polypropylene washable | Polypropylene washable | Polypropylene washable | Polypropylene washable | Polypropylene washable |

### Accessories







| FCU Interface Module | FCU Kit | Touch Controller | Wired Remote Controller | Wired Remote Controller |
|---|---|---|---|---|
| MIM-F10N | MIM-F00N | MWR-SH11N | MWR-WE13N | MWR-WG00*N |

Cooling: Indoor temperature 27 °C DB, 19 °C WB/Water In/Out temperature 7 °C, 12 °C Heating: Indoor temperature 20 °C DB, 15 °C WB/Water In/Out temperature 45 °C, 40 °C.
Sound level was acquired in an anechoic room. Thus actual noise level may be different depending on the installation conditions.
Specifications may be subject to change without prior notice.
Select wire size based on the MCA value.





VRF Chiller

# Dimensional drawings

## Cased FCU

ACL-**DG

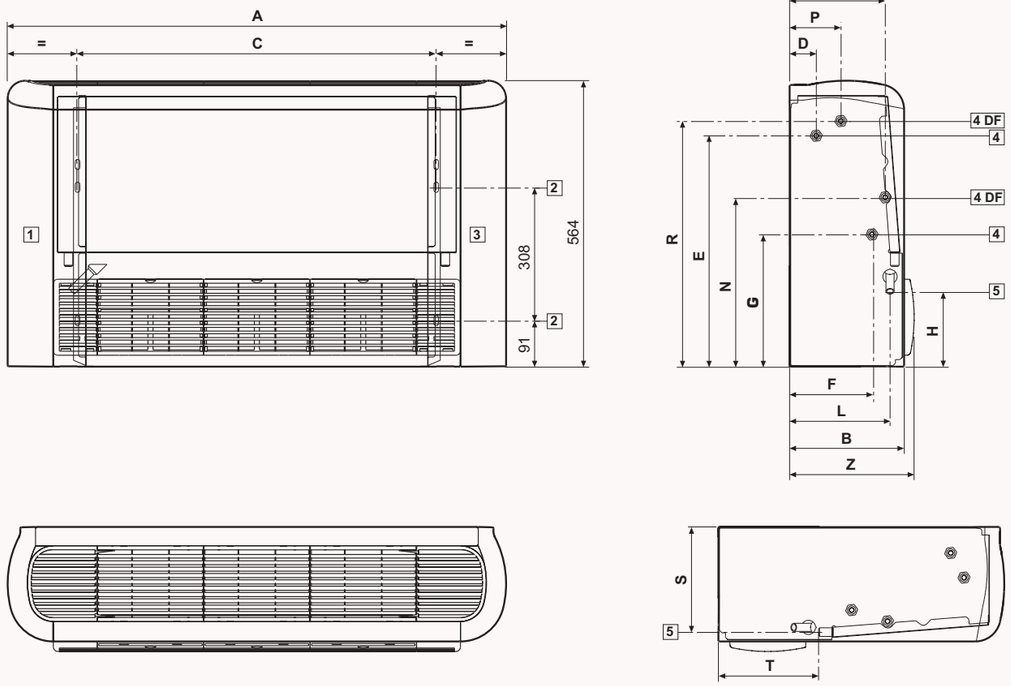


| NO | Name | Description |
|---|---|---|
| 1 | Water pipe connection out | PF Male 3/4 (20A) |
| 2 | Water pipe connection in | PF Male 3/4 (20A) |
| 3 | Air vent valve | |
| 4 | Drain hose | VP25 (OD 32, ID 25) |
| 5 | Power supply/communication wiring conduits | |
| 6 | Air discharge part | |
| 7 | Air suction part | |

| MODEL | A | B | C | H | L | S | T | Z |
|---|---|---|---|---|---|---|---|---|
| ACL-18DG | 774 | 226 | 498 | 149 | 198 | 208 | 198 | 246 |
| ACL-25DG | 984 | 226 | 708 | 149 | 198 | 208 | 198 | 246 |
| ACL-35DG | 1194 | 226 | 918 | 149 | 198 | 208 | 198 | 246 |
| ACL-55DG | 1404 | 251 | 1128 | 155 | 220 | 234 | 208 | 271 |
| ACL-65DG | 1404 | 251 | 1128 | 155 | 220 | 234 | 208 | 271 |

# Ventilation

# Specifications

## ERV

- Energy recovery ventilation unit.
- Optional vertical or horizontal installation.
- Cellulose heat exchanger element.
- F7 class air filter.
- Optional $CO_2$ sensor for automatic regulation.
- Bypass operation mode when there's a small temperature difference between indoor and outdoor environment (automatically or manually operated).
- Interlocking with DVM S indoor units.
- Frost formation prevention without electric heater.



| Model Name | | | | | AN026JSKLKN/EU | AN035JSKLKN/EU | AN050JSKLKN/EU | AN080JSKLKN/EU | AN100JSKLKN/EU |
|---|---|---|---|---|---|---|---|---|---|
| Power Supply | | | | Φ, #, V, Hz | 1Φ, 2, 220~240 V, 50/60 Hz | 1Φ, 2, 220~240 V, 50/60 Hz | 1Φ, 2, 220~240 V, 50/60 Hz | 1Φ, 2, 220~240 V, 50/60 Hz | 1Φ, 2, 220~240 V, 50/60 Hz |
| Performance | Air Volume | | | m³/h | 260 | 350 | 500 | 800 | 1,000 |
| | Temperature Exchange Efficiency | Cooling | Turbo/High/Low | % | 70/70/74 | 70/70/74 | 70/70/74 | 70/70/74 | 70/70/74 |
| | | Heating | Turbo/High/Low | % | 74/74/75 | 78/78/79 | 74/74/75 | 77/77/78 | 74/74/75 |
| | Effective Enthalpy Exchange Efficiency | Cooling | Turbo/High/Low | % | 50/50/55 | 50/50/55 | 50/50/55 | 50/50/55 | 50/50/55 |
| | | Heating | Turbo/High/Low | % | 70/70/76 | 70/70/76 | 70/70/76 | 70/70/76 | 70/70/76 |
| Power | Power Input | | Turbo/High/Low | W | 115/80/45 | 115/80/50 | 175/120/65 | 330/230/125 | 450/280/155 |
| | Current Input | | Turbo | A | 0.7 | 0.7 | 1.1 | 2.1 | 2.9 |
| Fan | Airflow Rate | | Turbo/High/Low | m³/h | 260/250/180 | 350/350/256 | 500/500/360 | 800/800/560 | 1,000/1,000/690 |
| | External Static Pressure | | Turbo/High/Low | Pa | 100/65/55 | 155/100/83 | 165/100/85 | 155/90/80 | 155/90/75 |
| Noise Level | Sound Pressure[1] | | Turbo/High/Low/ Quiet | dB(A) | 31/28/25/22 | 32/29/26/23 | 35/32/28/24 | 36/33/29/25 | 37/34/30/26 |
| | Sound Power | | | dB(A) | | | | | |
| Field Wiring | Power Source Wire | | | mm² | 1.5~2.5 | 1.5~2.5 | 1.5~2.5 | 1.5~2.5 | 1.5~2.5 |
| | Transmission Cable | | | mm² | 0.75~1.50 | 0.75~1.50 | 0.75~1.50 | 0.75~1.50 | 0.75~1.50 |
| Dimensions | Net Weight | | | kg | 28.5 | 42.5 | 42.5 | 67.0 | 67.0 |
| | Net Dimensions (W x H x D) | | | mm | 600 x 350 x 660 | 1,012 x 270 x 1,000 | 1,012 x 270 x 1,000 | 1,220 x 340 x 1,135 | 1,220 x 340 x 1,135 |
| | Supply/Return/Exhaust/Outside Duct Flange (ø) | | | mm | 150 | 200 | 200 | 250 | 250 |

### Accessories






| $CO_2$ Sensor | ERV Wired Remote Controller | Wired Remote Controller | Wired Remote Controller |
|---|---|---|---|
| MOS-C1 | MWR-VH12N | MWR-WE13N | MWR-WG00*N |

[1] Sound level was acquired in an anechoic room. Thus actual noise level may be different depending on the installation conditions.
[2] Please order MOS-P1050 separately. Differential pressure switch (model code: MOS-P1050) is a mandatory accessory for all ERV and ERV Plus units in EU countries according to Ecodesign Directive 1253/2014.





# Dimensional drawings

## ERV

AN026JSKLKN/EU

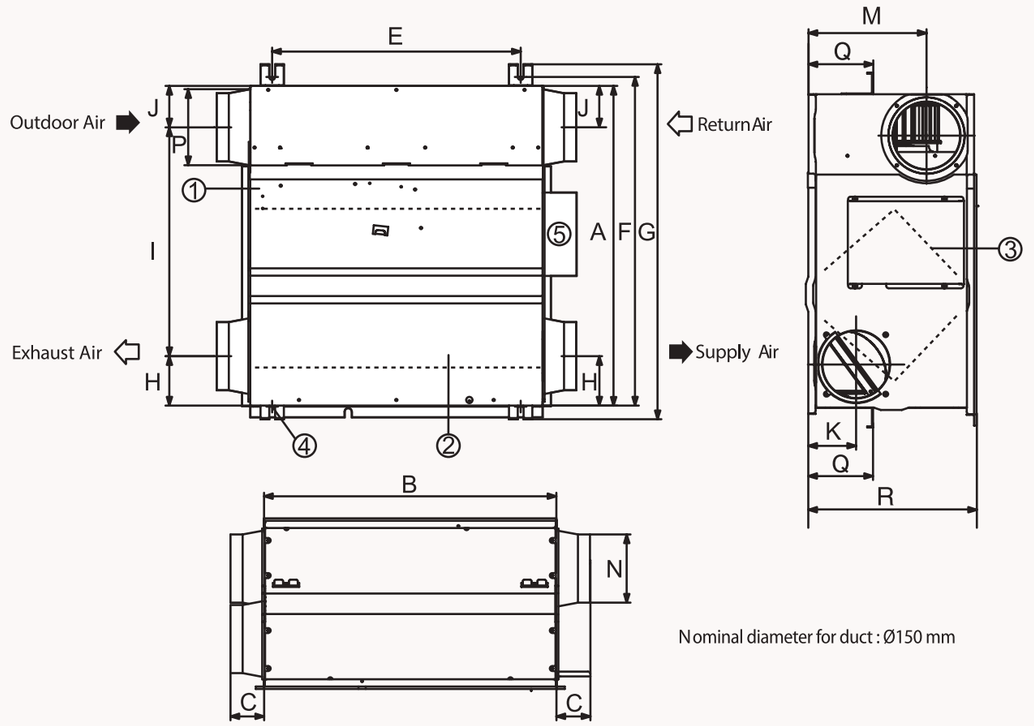


Nominal diameter for duct : Ø150 mm

| NO | Name | Description |
|---|---|---|
| 1 | Maintenance cover | 1 |
| 2 | Heat exchange element | 1 |
| 3 | Dust filter | 2 |
| 4 | Hanger | 4 |
| 5 | Electrical component box | 1 |

| Model | A | B | C | E | F | G | H | I | J | K | M | N | P | Q | R |
|---|---|---|---|---|---|---|---|---|---|---|---|---|---|---|---|
| | Length (mm) | | | | | | | | | | Diameter (mm) | | Length (mm) | | |
| 026 | 600 | 660 | 70 | 510 | 675 | 729 | 102 | 470 | 85 | 98 | 242 | 140 | 156 | 133 | 350 |

# Dimensional drawings

## ERV

035/050 - 080/100

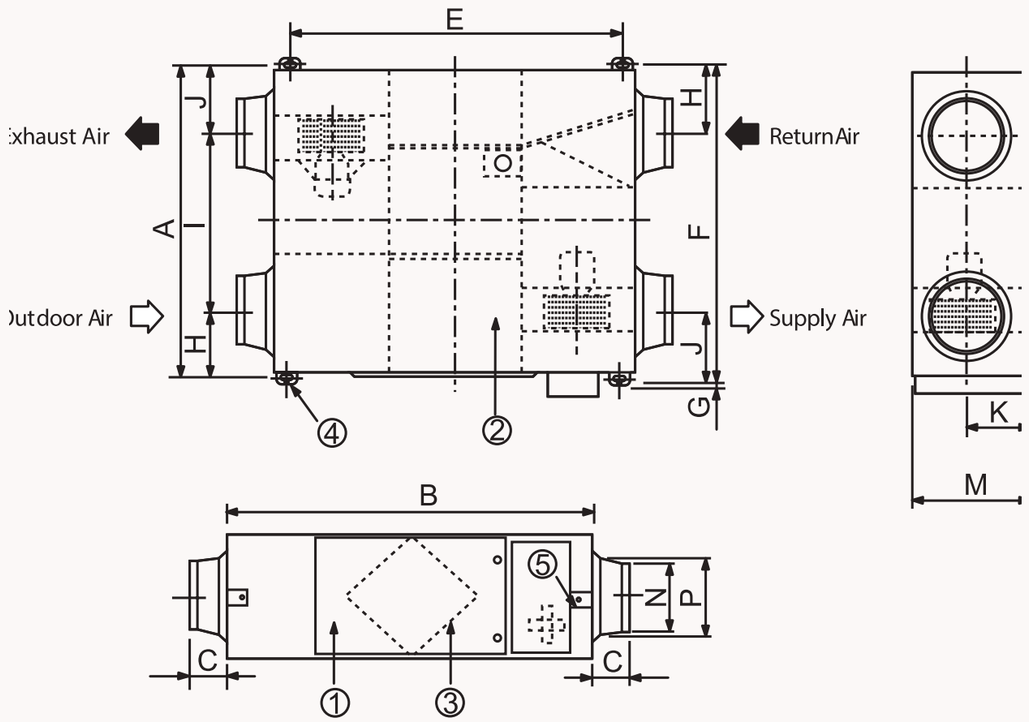


| NO | Name | Description |
|---|---|---|
| 1 | Maintenance cover | 1 |
| 2 | Heat exchange element | 2 |
| 3 | Dust filter | 4 |
| 4 | Hanger | 4 |
| 5 | Electrical component box | 1 |

| Model | Nominal diameter for duct (mm) |
|---|---|
| 035/050 | 200 |
| 080/100 | 250 |

| Model | A | B | C | E | F | G | H | I | J | K | M | N | P | Q | R |
|---|---|---|---|---|---|---|---|---|---|---|---|---|---|---|---|
| | Length (mm) | | | | | | | | | | Diameter (mm) | | Length (mm) | | |
| 035/050 | 1,000.00 | 1,012.00 | 99.00 | 940.60 | 1,036.40 | 26.00 | 130.00 | 617.00 | 253.00 | 135.00 | 270.00 | 194.00 | 241.50 | 133.00 | 350.00 |
| 080/100 | 1,135.00 | 1,220.00 | 84.00 | 1,110.00 | 1,183.00 | 25.00 | 184.00 | 613.25 | 387.75 | 170.00 | 340.00 | 244.00 | 270.00 | | |





Ventilation

# Specifications

## ERV Plus for DVM S

- Energy recovery ventilation unit with built-in direct expansion coil.
- Cellulose heat exchanger element.
- F7 class air filter.
- Two centrifugal fans direct driven by electric BLDC motor.
- Optional $CO_2$ sensor for automatic regulation.
- "Natural evaporating" humidifier type and humidity sensor optional.
- Bypass operation mode when there's a small temperature difference between indoor and outdoor environment (automatically or manually operated).
- Frost formation prevention without electric heater.
- Auto Restart function.




| Model Name | | | | | AN026JSKLKN/EU | AN035JSKLKN/EU |
|---|---|---|---|---|---|---|
| Power Supply | | | | Φ, #, V, Hz | 1Φ, 2, 220~240 V, 50 Hz | 1Φ, 2, 220~240 V, 50 Hz |
| Performance | Temp. Exchange Efficiency | Cooling | Turbo/High/Low | - | 70/70/74 | 70/70/74 |
| | | Heating | Turbo/High/Low | - | 75/75/79 | 75/75/79 |
| | Effective Enthalpy Exchange Efficiency | Cooling | Turbo/High/Low | - | 60/60/66 | 62/62/68 |
| | | Heating | Turbo/High/Low | - | 73/73/79 | 75/75/81 |
| | Outside Air Processing Capacity | | Cooling (DX Coil/Element) | - | 5.1 (3.6/1.5) | 10.5 (7.1/3.4) |
| | | | Heating (DX Coil/Element) | - | 6.5 (4.0/2.5) | 13.2 (8.0/5.2) |
| Fan | Airflow Rate | | Turbo/High/Low (UL) | $m_3$/hr | 500/500/360 | 1,000/1,000/690 |
| | | | | l/s | 138.9/138.9/100.0 | 277.8/277.8/191.7 |
| | External Static Pressure | | Turbo/High/Low | mmAq | 16.30/10.20/8.70 | 15.30/9.20/7.60 |
| | | | | Pa | 160.00/100.00/85.00 | 150.00/90.00/75.00 |
| | Motor | | Type | - | BLDC | BLDC |
| | | | Output | W | 180 | 70 |
| | | | Quantity | - | 2 | 2 |
| Power | Power Input | | Turbo/High/Low | W | 220/140/90 | 510/350/235 |
| | Current Input | | Turbo/High/Low | A | 1.7/1.0/0.6 | 3.7/2.4/1.6 |
| Piping Connections | Liquid Pipe | | | ø, mm | 6.35 | 6.35 |
| | | | | ø, inch | 1/4 | 1/4 |
| | Gas Pipe | | | ø, mm | 12.70 | 12.70 |
| | | | | ø, inch | 1/2 | 1/2 |
| | Drain Pipe | | | ø, mm | VP25 (OD 32, ID 25) | VP25 (OD 32, ID 25) |
| | | | | ø, inch | VP25 (OD 1-1/4", ID 1") | VP25 (OD 1-1/4", ID 1") |
| | Water Supply | | | ø, mm | 12.70 | 12.70 |
| | | | | ø, inch | 1/2 | 1/2 |
| Field Wiring | Power Source Wire | | | $mm^2$ | 1.5/2.5 | 1.5/2.5 |
| | Transmission Cable | | | $mm^2$ | 0.75~1.50 | 0.75~1.50 |
| Refrigerant | Type | | | - | R410A | R410A |
| | Control Method | | | - | EEV | EEV |
| Sound Pressure | Sound Level | | Turbo/High/Low | dB(A) | 36/32/28 | 36/33/31 |
| Dimensions | Net Weight | | | kg | 61.0 | 90.0 |
| | Net Dimensions (W x H x D) | | | mm | 1,553 x 270 x 1,000 | 1,763 x 340 x 1,135 |
| | Supply/Return/Exhaust/Outside Duct Flange (ø) | | | mm | 200 | 250 |
| Accessory | Air Filter | | | - | High Efficiency Filter (PP) | High Efficiency Filter (PP) |
| Accessory | SPi Ioniser | | | - | MSD-EAN1 | MSD-EAN1 |
| | $CO_2$ Sensor | | | - | MOS-C1 | MOS-C1 |
| Ambient Conditions | Around Unit | | | - | 0~40 °C DB, 80 % RH or less | 0~40 °C DB, 80 % RH or less |
| | Outdoor Air | | | - | -15~40 °C DB, 80 % RH or less | -15~40 °C DB, 80 % RH or less |
| | Return Air | | | - | 0~40 °C DB, 80 % RH or less | 0~40 °C DB, 80 % RH or less |

**Accessories**

|  |  |  |  |
|---|---|---|---|
| Wired Remote Controller | Wired Remote Controller | $CO_2$ Sensor | SPi Ioniser |
| MWR-WE13N | MWR-WG00*N | MOS-C1 | MSD-EAN1 |

[1] Please order MOS-P1050 separately. Differential pressure switch (model code: MOS-P1050) is a mandatory accessory for all ERV and ERV Plus units in EU countries according to Ecodesign Directive 1253/2014.



# Dimensional drawings

## ERV Plus for DVM S

**AM***FNKDEH/EU**

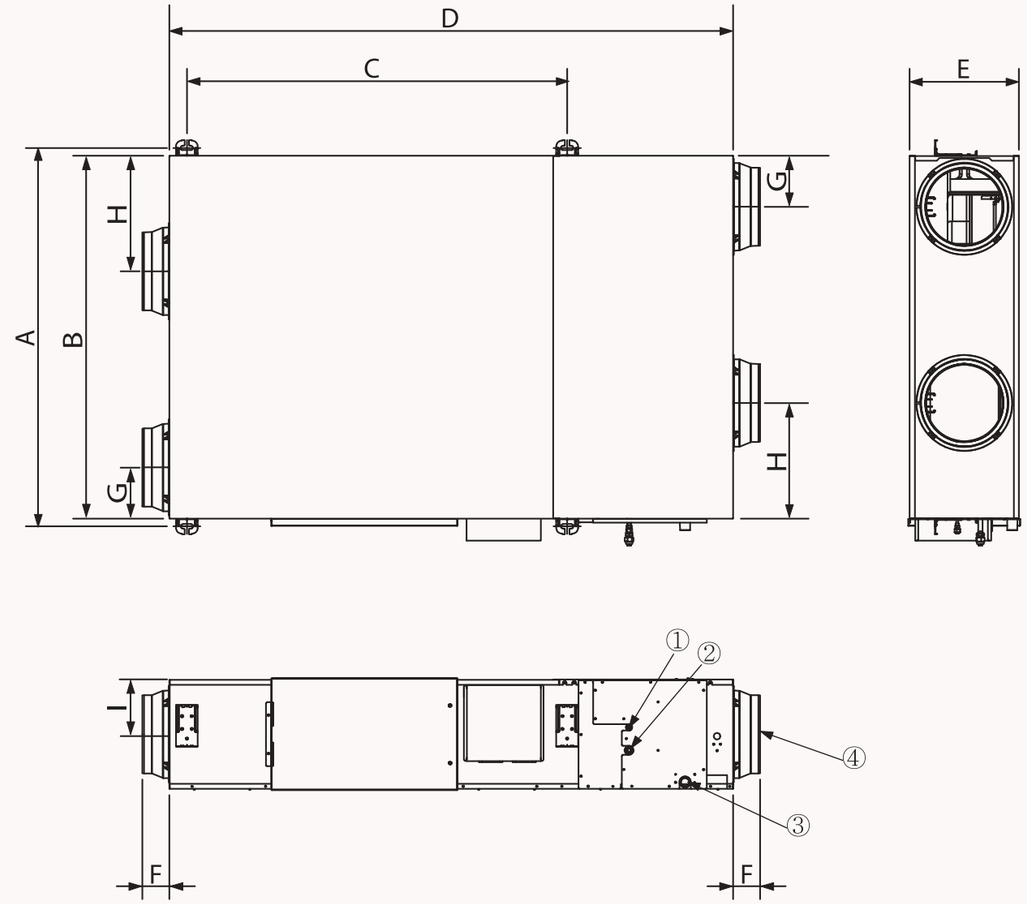


| NO | Name | Description | |
|---|---|---|---|
| | | AM050FNKDEH | AM100FNKDEH |
| 1 | Liquid pipe connection | ø6.35 Flare | |
| 2 | Gas pipe connection | ø12.70 Flare | |
| 3 | Drain pipe connection | VP25 (OD 32, ID 25) | |
| 4 | Nominal diameter for duct | Ø200 | Ø250 |

| Model | A | B | C | D | E | F | G | H | I |
|---|---|---|---|---|---|---|---|---|---|
| RHF050KHEA | 1,036 | 1,000 | 987 | 1,553 | 270 | 99 | 130 | 253 | 135 |
| RHF100KHEA | 1,183 | 1,135 | 1,189 | 1,763 | 340 | 84 | 160 | 362 | 170 |




Ventilation

# Specifications

## OAP Duct for DVM S

- 100% Fresh Air unit.
- Equipped with two Sirocco fans direct driven by a single motor.
- Discharge temperature control.
- No limitation in OAP Duct quantity for one system.
- HD 40 permanent filter is included.
- Auto ESP function: the fan speed is adjustable according to ductwork external static pressure.
- Can be combined with other DVM indoor units to form one system.



| Model | | | | AM140MNEPEH/EU | AM220MNEPEH/EU | AM280MNEPEH/EU |
|---|---|---|---|---|---|---|
| Power Supply | | | Φ, #, V, Hz | 1Φ, 2, 220~240 V, 50 Hz | 1Φ, 2, 220~240 V, 50 Hz | 1Φ, 2, 220~240 V, 50 Hz |
| Performance | Capacity (Nominal) | Cooling | kW | 14.0 | 22.4 | 28.0 |
| | | Heating | | 8.9 | 13.9 | 17.4 |
| Power | Power Input (Nominal) | Cooling | W | 300 | 450 | 600 |
| | | Heating | | 300 | 450 | 600 |
| | Current Input (Nominal) | Cooling | A | 2.2 | 3.5 | 4.6 |
| | | Heating | | 2.2 | 3.5 | 4.6 |
| Heat Exchanger | Type | | | Fin & tube | Fin & tube | Fin & tube |
| | Material | | Fin | Al | Al | Al |
| | | | Tube | Cu | Cu | Cu |
| Fan | Motor | Type | - | Sirocco Fan | Sirocco Fan | Sirocco Fan |
| | | Output x n | W | 183 x 1 | 630 x 1 | 630 x 1 |
| | | Number of Fans | - | 2 | 2 | 2 |
| | Airflow Rate | H/M/L | m³/min | 18 | 28 | 35 |
| | | | L/s | 300.0 | 466.7 | 583.3 |
| | External Pressure | Min/Std/Max | mmAq | 15.30/20.40/25.50 | 18.40/23.40/29.60 | 20.40/25.50/30.60 |
| | | | Pa | 150.00/200.00/250.00 | 180.00/230.00/290.00 | 200.00/250.00/300.00 |
| Piping Connections | Liquid Pipe | | ø, mm | 9.52 | 9.52 | 9.52 |
| | | | ø, inch | 3/8 | 3/8 | 3/8 |
| | Gas Pipe | | ø, mm | 15.88 | 19.05 | 22.22 |
| | | | ø, inch | 5/8 | 3/4 | 7/8 |
| | Drain Pipe | | ø, mm | VP25 (OD 32, ID 25) | VP25 (OD 32, ID 25) | VP25 (OD 32, ID 25) |
| Field Wiring | Transmission Cable | Min. | mm² | 0.75 | 0.75 | 0.75 |
| Refrigerant | Type | | - | R410A | R410A | R410A |
| | Control Method | | - | EEV (INCLUDED) | EEV (INCLUDED) | EEV (INCLUDED) |
| Noise Level | Sound Pressure[1] | H/M/L | dB(A) | 42 | 46 | 47 |
| | Sound Power | Cooling | dB(A) | 65 | 66 | 69 |
| Dimensions | Net Weight | | kg | 49.0 | 81.5 | 81.5 |
| | Net Dimensions (W x H x D) | | mm | 1 210 x 370 x 656 | 1,360 x 460 x 910 | 1,360 x 460 x 910 |
| Additional Accessories | Drain Pump | Drain Pump | - | MDP-N047SNC0D | MDP-N047SNC1D | MDP-N047SNC1D |
| | | Max. Lifting Height/ Displacement | mm / litres/h | 750/24 | 750/24 | 750/24 |
| | Air Filter | | - | Removable/ Washable | Removable/ Washable | Removable/ Washable |

Accessories









| Wireless Remote Controller | Touch Controller | Wired Remote Controller | Wired Remote Controller | Wi-Fi Kit | Wireless Receiver Kit | External Thermostat |
|---|---|---|---|---|---|---|
| AR-EH03E (to be matched with MRK-A10N) | MWR-SH11N | MWR-WE13N | MWR-WG00*N | MIM-H04EN | MRK-A10N (to be matched with AR-EH03E) | MRW-TA |

[1] Sound level was acquired in an anechoic room. Thus actual noise level may be different depending on the installation conditions.



# Dimensional drawings

## OAP Duct for DVM S

AM140MNEP*H

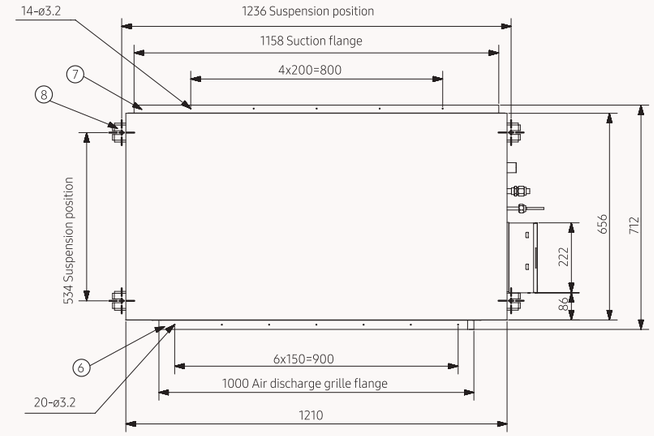


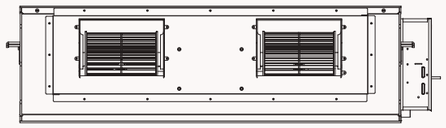

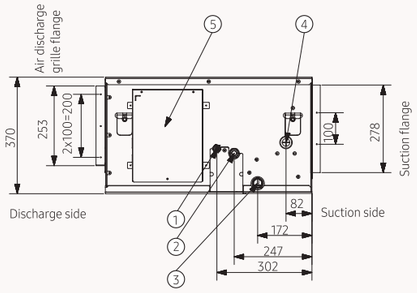


| NO | Name | Description |
|---|---|---|
| 1 | Diameter of liquid pipe | ø9.52 |
| 2 | Diameter of air pipe | ø15.88 |
| 3 | Diameter of drain pipe | OD ø25, ID ø20 |
| 4 | Diameter of drain pipe (Optional drain pump) | OD ø25, ID ø20 |
| 5 | Power supply/Communication wiring conduit | |
| 6 | Air discharge grille flange | |
| 7 | Suction flange | |
| 8 | Hook | ø9.52 or M10 |

# Dimensional drawings

## OAP Duct for DVM S

**AM140MNEP*H**

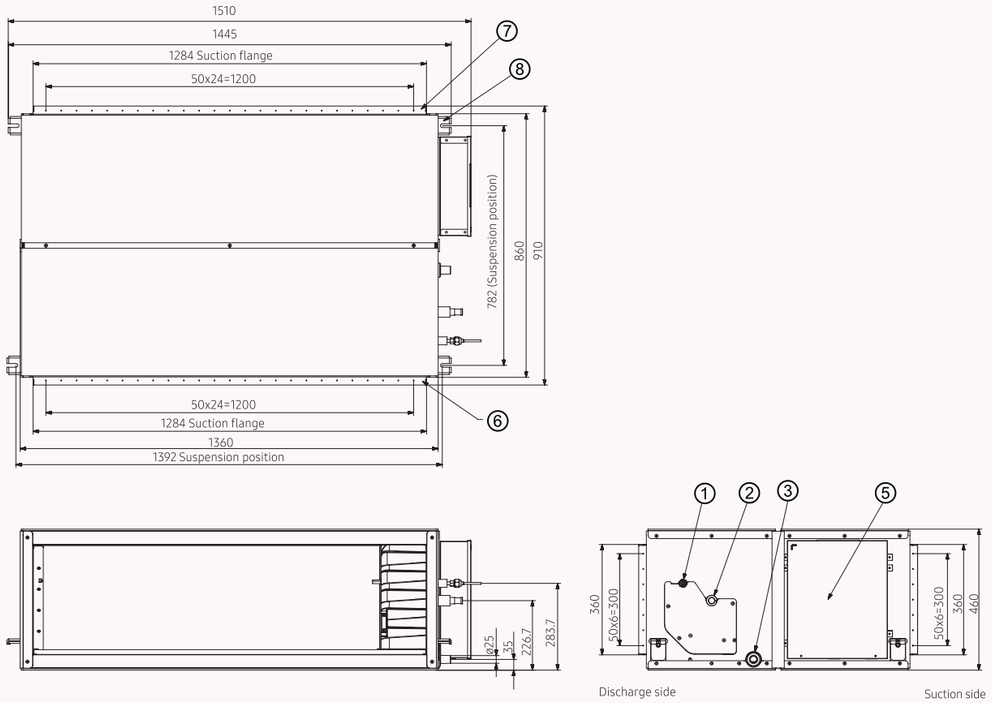


| NO | Name | Description |
|---|---|---|
| 1 | Diameter of liquid pipe | ø9.52 |
| 2 | Diameter of air pipe | ø15.88 |
| 3 | Diameter of drain pipe | OD ø25, ID ø20 |
| 4 | Diameter of drain pipe (Optional drain pump) | OD ø25, ID ø20 |
| 5 | Power supply/Communication wiring conduit | |
| 6 | Air discharge grille flange | |
| 7 | Suction flange | |
| 8 | Hook | ø9.52 or M10 |



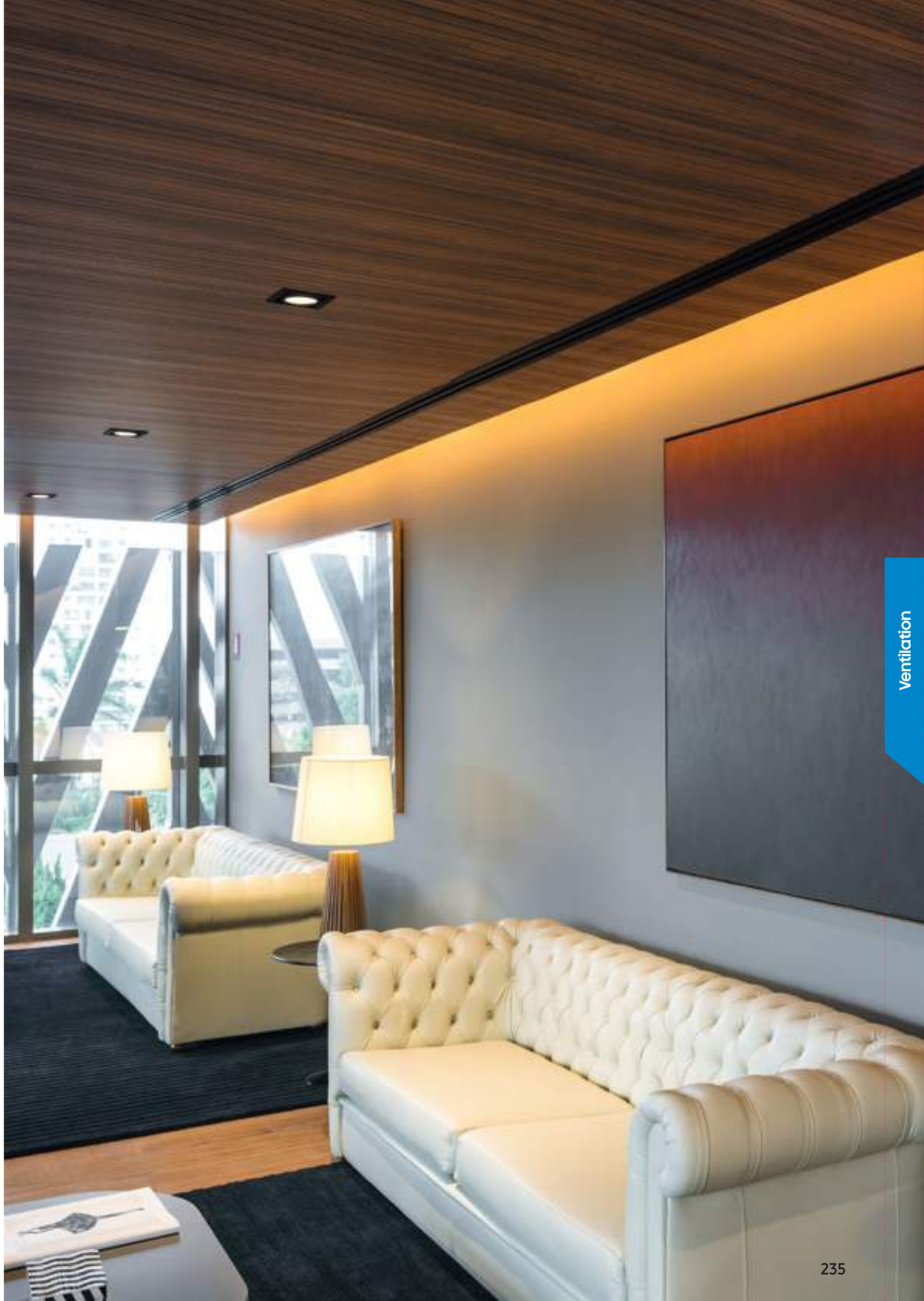

Ventilation

# Controls

# Line-up

| | Product | Model | Image | Matchable Products |
|---|---|---|---|---|
| Individual Control System | Wireless Remote Controller | AR-EH03M<br>AR-EH03E |  | DVM, FJM, CAC |
| | Wireless Remote Controller | AR-KH03E |  | CAC, DVM<br>*only for 360 Cassette |
| | Wired Remote Controller | MWR-WE13N |  | DVM, CAC, FJM |
| | Wired Remote Controller | MWR-WG00*N |  | DVM, CAC, FJM, ERV |
| | Simple Type Controller | MWR-SH00N |  | DVM, CAC |
| | Touch Type Controller | MWR-SH11N |  | DVM, CAC<br>(with Wind-Free™ function) |
| | ERV Wired Remote Controller | MWR-VH12N |  | ERV |
| | Wireless Receiver Kit | MRK-A10N |  | DVM, CAC (only duct models) |
| Centralised Control System | ON/OFF Controller | MCM-A202DN |  | DVM, FJM, CAC, ERV Plus, EHS Split/Mono |
| | Touch Centralised Controller | MCM-A300N |  | DVM, FJM, CAC, ERV Plus, EHS Split/Mono |
| | Wi-Fi Kit | MIM-H04EN |  | All |
| | Module Controller | MCM-A00N |  | DVM Chiller |
| Integrated Management System | DMS2.5 | MIM-D01AN |  | DVM, FJM, CAC, ERV Plus, EHS Split/Mono |
| | S-NET3 | MST-P3P |  | |





| | Product | Model | Image | Matchable Products |
|---|---|---|---|---|
| Gateway System | BACnet Gateway | MIM-B17BN |  | DVM, FJM, CAC, ERV Plus, EHS Split/Mono |
| | LonWorks Gateway | MIM-B18BN |  | DVM, FJM, CAC, ERV Plus, EHS Split/Mono |
| | External Contact Interface Module | MIM-B14 |  | DVM, RAC, FJM, CAC, EHS |
| | PIM (Pulse Interface Module) | MIM-B16N |  | DVM, FJM, CAC, ERV Plus, EHS Split/Mono |
| | Interface Module (Converter RS485 to NASA) | MIM-N01 |  | FJM, CAC, EHS |
| | ERV Interface Module (Converter RS485 to NASA) | MIM-N10 |  | ERV |
| | FCU Interface Module | MIM-F10N |  | Chiller |
| Installation/ Test Run Solution | S-Converter | MIM-C02N |  | |
| Others | External Room Sensor | MRW-TA |  | DVM, FJM, CAC |
| | Operation Mode Selection Switch | MCM-C200 |  | |
| | MTFC (Multi-Tenant Function Controller) | MCM-C210N |  | |
| Integrated Management System | DMS2.5 | MIM-D01AN |  | DVM, FJM, CAC, ERV Plus, EHS Split/Mono |
| | S-NET3 | MST-P3P |  | |

# Compatibility guide

| Classification | Product | Model | Image | Compatibility | | | | | | | | | | | |
|---|---|---|---|---|---|---|---|---|---|---|---|---|---|---|---|
| | | | | DVM | HVM Chiller | Water FCU | FCU Kit | ERV | ERV Kit | ERV Plus | PAC | AHU Kit |
| Individual Control System | Wireless Remote Controller | AR-EH03M<br>AR-EH03E |  | ● | | ● | ● | | | | | ● |
| | Wireless Remote Controller (360 Cassette only) | AR-KH03 |  | ● | | ● | | | | | | |
| | Wired Remote Controller | MWR-WE13N |  | ● | | ● | ● | ● | | ● | | ● |
| | Wired Remote Controller | MWR-WG00*N |  | ● | | ● | ● | ● | | ● | | ● |
| | Simple Type Controller | MWR-SH00N |  | ● | | ● | ● | | | | | |
| | Touch Controller | MWR-SH11N |  | ● | | ● | ● | | | | | |
| | ERV Wired Remote Controller | MWR-VH12N |  | | | | | ● | | ● | | |
| | Wireless Receiver Kit | MRK-A10N |  | ● | | | | | | | | |
| Centralised Control System | Touch Centralised Controller | MCM-A300N |  | ● | ● | ● | ● | ● | ● | ● | ● | ● |
| | ON/OFF Controller | MCM-A202DN |  | ● | ● | ● | ● | ● | | ● | ● | ● |
| | Wi-Fi Kit | MIM-H04EN |  | ● | | ● | | ● | ● | ● | ● | ● |
| | Module Controller | MCM-A00N |  | | ● | | | | | | | |
| Integrated Management System | DMS 2.5 | MIM-D01AN |  | ● | ● | ● | ● | ● | ● | ● | ● | ● |
| | S-NET3 | MST-P3P |  | ● | | | | ● | | ● | ● | ● |
| Gateway System | BACnet Gateway | MIM-B17BN |  | ● | ● | ● | ● | ● | ● | ● | ● | ● |
| | Lonworks Gateway | MIM-B18BN |  | ● | ● | ● | ● | ● | ● | | ● | ● |
| | Modbus Interface Module | MIM-B19N |  | ● | ● | ● | ● | ● | | ● | ● | ● |
| | PIM (Pulse interface module) | MIM-B16N |  | ● | ● | ● | ● | ● | ● | ● | ● | ● |
| | External Contact Interface Module | MIM-B14 |  | ● | ● | ● | ● | ● | | ● | ● | ● |
| | | MIM-B14A (refrigerant leakage detector) |  | ● | | | | | | | | |
| | Interface Module Converter (RS485-NASA) | MIM-N01 |  | ● | | | | | | ● | ● | ● |
| | ERV Interface Module Converter (RS485-NASA) | MIM-N10 |  | | | | | ● | ● | | | |
| | FCU Interface Module | MIM-F00N<br>MIM-F10N |  | | | ● | ● | | | | | |
| Installation/ Test Run Solution | S-Converter | MIM-C02N |  | ● | ● | ● | ● | ● | ● | ● | ● | ● |
| Others | External Room Sensor | MRW-TA |  | ● | | ● | ● | | | | | |
| | Operation Mode Selection Switch | MIM-C200 |  | ● | | | | | | | | |
| | MTFC (Multi-Tenant Function Controller) | MCM-210N |  | ● | | | | | | | | |

# Selection guide






| Model | | MWR-WG00*N | MWR-WE13N | MWR-SH11N | MWR-VH12N |
|---|---|---|---|---|---|
| Appearance | Dimensions | 120.0 x 120.0 x 19.0 | 120.0 x 124.0 x 19.5 | 94.2 x 122.0 x 19.5 | 75.0 x 122.0 x 16.6 |
| Connection | Indoor units control | ● | ● | ● | |
| | ERV control | ● | ● | | ● |
| | Maximum connectable indoor units | 16 | 16 | 16 | 6 |
| Control & monitoring | ON/OFF | ● | ● | ● | ● |
| | Operation mode | ● | ● | ● | ● |
| | Fan speed | ● | ● | ● | ● |
| | Air swing | ● | ● | ● | |
| | Room temperature display | ● | | | |
| | °C convertible | ● | ● | ● | |
| | Filter cleaning alarm reset | ● | ● | ● | |
| | Air quality display | ● | | | |
| | Purification display | ● | | | |
| | Display indoor model number | ● | | | |
| | Error display | ● | ● | ● | ● |
| | Error list | ● | | | |
| Schedule | Weekly schedule | ● | ● | | |
| | Simple ON/OFF timer | | | ● | ● |
| Convenient function | Dual set point | ● | | | |
| | Multiple languages | ● | | | |
| | Built-in room sensor | ● | ● | ● | |
| | LCD backlight | ● | ● | ● | |
| | Wireless RC restriction | ● | ● | ● | |
| | Child lock | ● | ● | ● | ● |
| | Partial button lock | ● | ● | ● | ● |
| | Quiet mode | ● | ● | ● | |
| | Sleep mode | ● | ● | ● | |
| | Away mode (SAC) | ● | | ● | |
| | Away mode (ERV) | | | | ● |
| | IR receiver | ● | | ● | |
| | Real-time clock | | ● | | |
| | Daylight saving time | ● | ● | | |
| | Individual blade control | ● | ● | | |
| | $CO_2$ display | ○ ERV | ○ ERV | | ● |
| | Humidity display | ○ ERV | ○ ERV | | |
| | Purification mode | ○ ERV | ○ ERV | | |
| Energy saving | Temperature range limit | ● | ● | ● | |
| | Automatic operation stop | ● | ● | | |
| | Operation time limit | ● | | | |
| | Energy consumption monitoring | ● | | | |
| | Energy saving mode with ERV | ● | ● | | |
| Maintenance | SD slot | ● | | | |







Controls

# Features and Dimensional drawings



## Individual Control System

### Wireless Remote Controller
### AR-EH03E / AR-EH03M

- Operation ON/OFF control
- Fan speed control
- Operation temperature setting
- Wind-Free™ Cooling function
- Filter replacement alarm reset
- Air swing control
- Simple ON/OFF timer
- Indoor unit option code setting
- Option/Setting selection



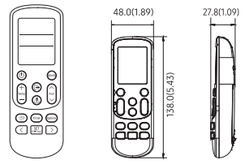


### Wireless Remote Controller
### AR-KH03E

- 360 Cassette airflow direction control
- Operation ON/OFF control
- Fan speed control
- Operation temperature setting
- Filter replacement alarm reset
- Simple ON/OFF timer
- Indoor unit option code setting



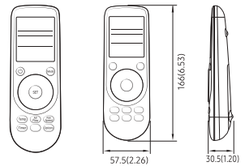


### Wired Remote Controller
### MWR-WE13N / MWR-WG00*N

**Air conditioner/ERV control**
- AC control: ON/OFF, operation mode, temperature setting, fan speed, airflow direction
- ERV control: ON/OFF, operation mode, fan speed
- AC/ERV error monitoring
- Filter cleaning alert and reset alert time
- Control a maximum of 16 “Indoor unit + ERV” in a group with a single wired controller

**Energy saving operation**
- Upper/lower temperature limit setting
- Automatically stops operating when not used for certain period of time as set by user

**Weekly operation schedule setting**
- Weekly operating schedule (A/C only, ERV only, A/C+ERV)
- Set desired AC operation mode, temperature and fan speed to operate based on a weekly schedule
- Apply schedule exception day
- Energy consumption monitoring (MWR-WG00*N)
- Operation time limit (MWR-WG00*N)

**User convenience function**
- Child lock
- Different button permission levels
- Room temperature display (MWR-WG00*N)
- Dual set point (MWR-WG00*N)
- Built-in room temperature sensor
- Real-time clock: displays current time and day (summer time support)
- Multiple language support
- Service mode support
  - Indoor unit cycle data monitoring
  - Indoor unit option code setting and monitoring
  - Indoor unit address setting and monitoring (MWR-WG00*N)
  - SD card slot (MWR-WG00*N)



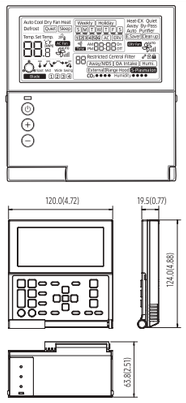




### Simple Type Controller
### MWR-SH00N

- Simplified wired remote controller
- AC operation ON/OFF control
- Fan speed control
- Setting operation mode and temperature
- Reset filter cleaning alert indicator
- Adjust airflow direction
- Operation ON/OFF timer function



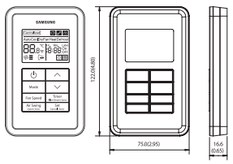


### Touch Controller
### MWR-SH11N

- Bigger display: clear & bright backlight screen with big fonts
- Wind-Free™ button: control Wind-Free™ function with just one click
- Room temperature monitor and room temperature display thanks to the built-in temperature sensor
- Icon/Function Lock: option of restricting icon/function on the display
- Sleep Mode: help users to sleep better by controlling temperature
- Outing Feature: keep room temperature above/below specific set value when the user is out of the room



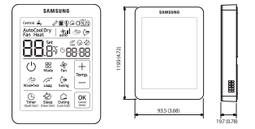


### Wireless Receiver Kit
### MRK-A10N

- Concealed wireless signal receiver
- Filter replacement sign
- Fan operation display
- Operation Timer setting display
- Operation ON/OFF button
- Operation On display LED (blue)
- Defrost operation display LED (red)



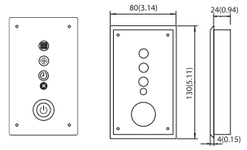


## Centralised Control System

### ON/OFF Controller
### MCM-A202DN

- Maximum 16-group controller (Max. 128 units)
- Whole/Group/Individual indoor unit control (ON/OFF)
- Restriction on the use of wireless/wired remote controllers and external contact control
- Cooling and heating mode control
- Indoor unit error display



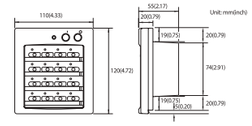


### Touch Centralised Controller
### MCM-A300N

- 7-inch touch LCD controller
- Controls a maximum of 128 indoor units
- Controls a maximum of 12 zones
- Schedule control, Indoor unit usage restriction, View indoor unit error history



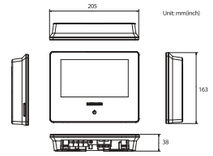


### Wi-Fi Kit
### Replace with:
### MIM-H04EN

- Controls and monitoring system air conditioner by mobile phone. (Max. 16 units)
- Weekly schedule setting
- Group control and monitoring (ON/OFF)
- Current/daily/weekly/monthly energy usage data of outdoor unit. (This function is available in certain outdoor unit models)



### Module Controller
### MCM-A00N

- DVM CHILLER ON/OFF control (Module/Group)
- Operation mode, water outlet temperature setting
- Optional operation setting
- Module/Group setting
- Weekly operation schedule setting



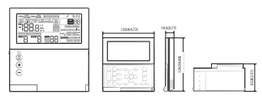

## Gateway System

**BACnet Gateway**
**MIM-B17BN**

**With the BMS control and monitoring function, BACnet gateway makes it easy to control the air conditioning network in various ways. BACnet gateway can control up to 256 indoor units, used in combination with S-NET 3.**
- Interface for BACnet management system
- Maximum of 256 indoor units plus ERVs, supported by a maximum of 80 interface modules
- Includes DMS 2.5 functions



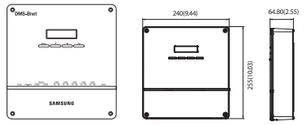


**LonWorks Gateway**
**MIM-B18BN**

**LonWorks gateway is an interface for Lon-Connection to the LonWorks management system, providing you with a more convenient way to manage your air conditioning system. It can control a maximum of 128 indoor units, used in combination with S-NET 3.**
- Exclusive use for DMS 2.5 power distribution
- Connection with up to eight watt-hour meters
- Pulse interface with watt-hour meters
- Watt-hour meter - by third party



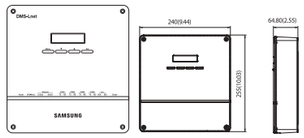


**External Contact Interface Module**
**MIM-B14**

**Samsung Guestroom Management System saves users the energy and money wasted on cooling an unoccupied room. The air conditioner is activated when the Key-Tag is in place and turns off when the Key-Tag is removed. An external contact interface module provides direct indoor unit control via an external contact signal, as well as window-synchronised indoor unit control. The emergency control function features simple contact input. The module also generates indoor unit operation/error state output through relay contacts.**
- Direct indoor unit control by external contact signal
- Window-synchronised indoor unit control
- Emergency control with simple contact input
- Indoor unit operation/error state output through relay contacts



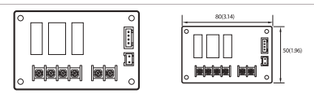


**PIM (Pulse Interface Module)**
**MIM-B16N**

- The Watt-Hour Meter Interface Module can be exclusively used for DMS 2.5 power distribution, displaying power consumption for each watt-hour meter.
- Exclusive use for DMS 2.5 power distribution
- Connection with up to eight watt-hour meters
- Pulse interface with watt-hour meters
- Watt-hour meter - by third party



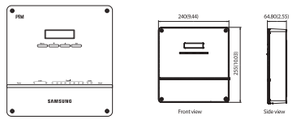


**Interface Module**
**MIM-N01**

- Communication interface module between outdoor units and the upper level controller which makes use of a different type of communication
- Connect one interface module to one outdoor unit
- Individual control - maximum of 48 indoor units
- Group control - maximum of 16 groups
- Automatic detection of communication type: determine the communication type used by the upper level controller according to the communication type used by the outdoor unit
- Supported communication type
  - Conventional outdoor unit communication ⟷ New upper level controller communication
  - New outdoor unit communication ⟷ Conventional upper level controller communication



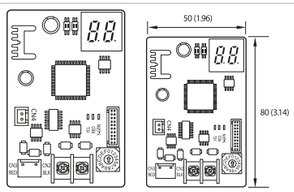




**Interface Module (Converter RS485 to NASA)**
**MIM-N10**

- Communication interface module between new communication ERV and controller
- Connect one ERV interface module to a maximum of 16 ERVs
- Individual control - maximum of 16 ERVs
- Group control - maximum of 16 groups
- Supported communication type
  - Conventional ERV communication ⟷ New upper level controller communication
  - New ERV communication ⟷ Conventional upper level controller communication
  - New ERV communication ⟷ New upper level controller communication



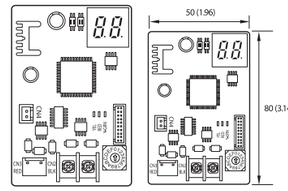


**FCU Interface Module**
**MIM-F10N**

- Communication interface module
- Connect one FCU interface module to a maximum of 16 FCU Kits.
- Supports FCU Kit only



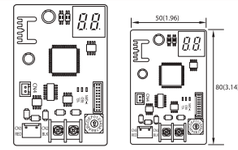


## Installation/Test Run Solution

**S-Converter**
**MIM-C02N**

- Communication converting module to connect Samsung system air conditioner to a PC.
- Main purpose for use
  - To connect with test run programme [Test run programme]
  - S-NET Pro: Conventional communication
  - S-NET Pro2: New communication



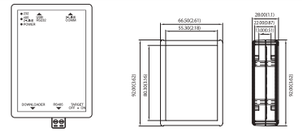


## Others

**External Room Sensor**
**MRW-TA**

- Indoor unit is operated by MRW-TA instead of its own sensor.
- Wire length: 12 m (39 ft)



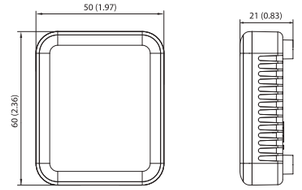


**Operation Mode Selection Switch**
**MCM-C200**

- Outdoor unit operation mode selection (Cooling, Heating or Auto)
- Mixed operation mode protection



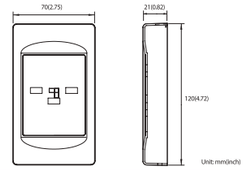


**MTFC (Multi-Tenant Function Controller)**
**MCM-C210N**

- Multi-tenant function controller is an auxiliary power supply device which allows the indoor unit to turn off (close EEV) normally and maintain communication when the mains power supply is cut.
- It is used on sites such as hotels, where individual power is supplied to the indoor unit



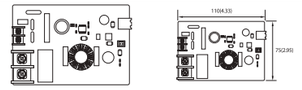

# Accessories

# Line-up

| Classification | Image | Model<br>DVM S<br>(New Communication Protocol) | Application |
|---|---|---|---|
| **Drain Pump** |  | MDP-E075SEE3D | Slim Duct (2.0~14.0 kW) |
| |  | MDP-M075SGU1D | MSP Duct (9.0/11.2 kW) |
| | | MDP-M075SGU2D | MSP Duct (12.8/14.0 kW)<br>HSP Duct (11.2/14.0 kW) |
| | | MDP-M075SGU3D | MSP Duct (5.6/7.1 kW) |
| | | MDP-N047SNC0D | Fresh Air Intake Duct (14.0 kW) |
| | | MDP-N047SNC1D | HSP Duct (22.4/28.0 kW)<br>Fresh Air Intake Duct (14.0 kW) |
| |  | - | Global Duct (External Type) |
| |  | - | Global Duct (Internal Type) |
| **AHU Kits** |  | MXD-K025AN | 7.00~8.75 kW AHU |
| | | MXD-K050AN | 14.00~17.50 kW AHU |
| | | MXD-K075AN | 21.00~26.25 kW AHU |
| | | MXD-K100AN | 28.00~35.00 kW AHU |
| |  | MXD-A64K100E | AHU EEV Kit (10 hp) |
| | | MCM-D201N | Control Kit (PBA, 10 hp~40 hp) |
| **Humidifier** |  | MVO-VA050100 | 500 m3/hr (ERV Plus) |
| | | MVO-VA100100 | 1,000 m3/hr (ERV Plus) |
| **360 Cassette Front Panel** |  | PC4NUDMAN | NASA, Square |
| |  | PC4NBDMAN | NASA, Square - Black |
| |  | PC4NUNMAN | NASA, Circle (exposed installation) |
| |  | PC4NBNMA | NASA, Circle (exposed installation) - Black |
| **Wind-Free™ 4-Way Cassette Front Panel** |  | PC4NUFMAN | Wind-Free™ 4-Way Cassette |
| **4-Way Cassette Front Panel** |  | PC4NUSKAN | 4-Way Cassette S - Waffle |
| |  | PC4NUSKEN | 4-Way Cassette S - Classic |
| |  | PC4NBSKAN | 4-Way Cassette S - Black |
| **Wind-Free™ 4-Way Cassette Front Panel (600 x 600)** |  | PC4SUFMAN | Wind-Free™ 4-Way Cassette (600 x 600) |
| **Wind-Free™ 1-Way Cassette Front Panel** |  | PC1NWFMAN | |
| **1-Way Cassette Front Panel** |  | PC1BWSMAN | 1-Way Cassette (New Air Fluid Design) (1.7~2.2 kW) |
| |  | PC1NUSMAN | Slim 1-Way Cassette (2.2~3.5 kW) |
| |  | PC1NUPMAN | Slim 1-Way Cassette Z-Sliding (2.2~3.5 kW) |
| **SPi Ioniser** |  | MSD-CAN1 | Big Ceiling, 360 Cassette, Wind-Free™ 4-Way Cassette |
| | | MSD-EAN1 | Duct S, ERV (Plus) |
| **Motion Detect Sensor** |  | MCR-SMA | 4-Way Cassette S (600 x 600) |
| |  | MCR-SMC | Wind-Free™ 4-Way Cassette |
| |  | MCR-SMD | Small chassis Wind-Free™ 4-Way Cassette |

| Classification | Image | Model | Application |
|---|---|---|---|
| **Y-joint** |  | MXJ-YA1509M | 15.0 kW and below |
| | | MXJ-YM1206M | Over 6.0 kW~14.0 kW and below |
| | | MXJ-YM1509M | Over 16.0 kW~28.0 kW and below |
| | | MXJ-YA2512M | Over 15.0 kW~40.0 kW and below |
| | | MXJ-YA2812M | Over 40.0 kW~45.0 kW and below |
| | | MXJ-YA2815M | Over 45.0 kW~70.3 kW and below |
| | | MXJ-YA3419M | Over 70.3 kW~98.4 kW and below |
| | | MXJ-YA4119M | Over 98.4 kW~135.2 kW and below |
| | | MXJ-YA4422M | Over 135.2 kW |
| **Y-Joint (HR Only)** |  | MXJ-YM1206R | Over 6.0 kW~14.0 kW and below |
| | | MXJ-YA1500M | 22.4 kW and below |
| | | MXJ-YA2500M | Over 22.4 kW~70.3 kW and below |
| | | MXJ-YA3100M | Over 70.3 kW~135.2 kW and below |
| | | MXJ-YA3800M | Over 135.2 kW |
| **Y-Joint (Outdoor Unit)** |  | MXJ-TA3419M | 135.2 kW and below |
| | | MXJ-TA4122M | 140.2 kW and over |
| **Y-Joint (HR Outdoor Unit)** |  | MXJ-TA3100M | 135.2 kW and below |
| | | MXJ-TA3800M | 140.2 kW and over |
| **Distribution Header** |  | MXJ-HA2512M | 45.0 kW and below (for 4 rooms) |
| | | MXJ-HA3115M | 70.3 kW and below (for 8 rooms) |
| | | MXJ-HA3819M | Over 70.3 kW~135.2 kW and below (for 8 rooms) |
| **Heat Recovery Changer** |  | MCU-R4NEK0N | |
| | | MCU-S6NEK3N | |
| **MCU** |  | MCU-S6NEK2N | 6 ports, max 61.6 kW (~16 kW/port) |
| | | MCU-S4NEK3N | 4 ports, max 61.6 kW (~16 kW/port) |
| | | MCU-S2NEK2N | 2 ports, max 32.0 kW (~16 kW/port) |
| | | MCU-S1NEK1N | 1 ports, max 16.0 kW (~16 kW/port) |
| **EEV Kit** |  | MXD-E24K132A | 2 Indoor |
| | | MXD-E24K200A | |
| | | MXD-E32K200A | |
| |  | MXD-E24K232A | 3 Indoor |
| | | MXD-E24K300A | |
| | | MXD-E32K224A | |
| | | MXD-E32K300A | |
| |  | MEV-E24SA | 1 Indoor |
| | | MEV-E32SA | |
| **PDM (Pressure Drop Modulation) Kit** |  | MXD-A38K2A | 8~12 hp |
| | | MXD-A12K2A | 14~16 hp |
| | | MXD-A58K2A | 18~26 hp |

# Design and support

# Samsung Climate Solutions Partner Portal

As one of Samsung's registered Climate Solutions partners, you will have access to our Partner Portal and its many benefits. Whether you are looking for marketing materials or technical product documentation, requesting technical support or registering for training, the Samsung Climate Solutions Partner Portal offers you everything you need to consistently deliver the best results.

## Access technical resources

The Technical Resources section provides you with all of the relevant information you need to understand the product's functionality and to prepare and design projects. A library full of technical information is at your fingertips, ranging from technical data books, BIM files and certificates to exploded views, drawings and different kinds of manuals.





## Obtain marketing resources

Potential buyers like to know that you are on the cutting edge of Samsung's latest innovations. To enable you to align with Samsung's marketing initiatives, the Partner Portal provides you with useful downloadable assets such as images and videos, designed to make your marketing activities easy and effective.




## Request technical support

You can easily request technical support through the Samsung Partner Portal by reporting your case using our built-in ticketing system. You can rest assured that our well-trained technical experts will work to solve your issue as soon as possible.

## Register for training

If you are dedicated to becoming a Samsung climate solutions expert, you can access Samsung's educational portal for training sessions provided by experienced trainers. The portal allows you to search for online courses and materials, test your climate solutions knowledge, and more. The Samsung Business Academy is here to help you succeed.[1]

[1] The registration process for and availability of training courses may vary per country. Please contact your direct Samsung contact person for more information.




## How to access

**1 Register**

To register for the Samsung Climate Solutions Partner Portal, open your web browser[1] and go to **partnerhub.samsung.com/climate** to complete the registration form.

**2 Access**

Your information will be verified and your account will be activated. You will receive your personal login details.

**3 Manage account**

Keep your account details up to date and invite your colleagues to join.

**4 Search and download**

Access a full library of resources, request technical support, or sign up for a Climate Solutions Academy training session.

[1] Google Chrome is the recommended web browser for using the Samsung Climate Solutions Partner Portal.

# Samsung DVM-Pro

Samsung DVM-Pro is an advanced design automation programme which helps you to select the most suitable equipment for easily and precisely designing your air conditioning system. It helps to ensure that the system's design falls within Samsung's engineering guidelines. With its reports, pipe and wire diagrams, additional refrigerant values and other information, Samsung DVM-Pro is a powerful tool for engineers, designers or installers.

## Sales mode

Sales Mode enables users to define their requirements and select air conditioning products quickly and easily.

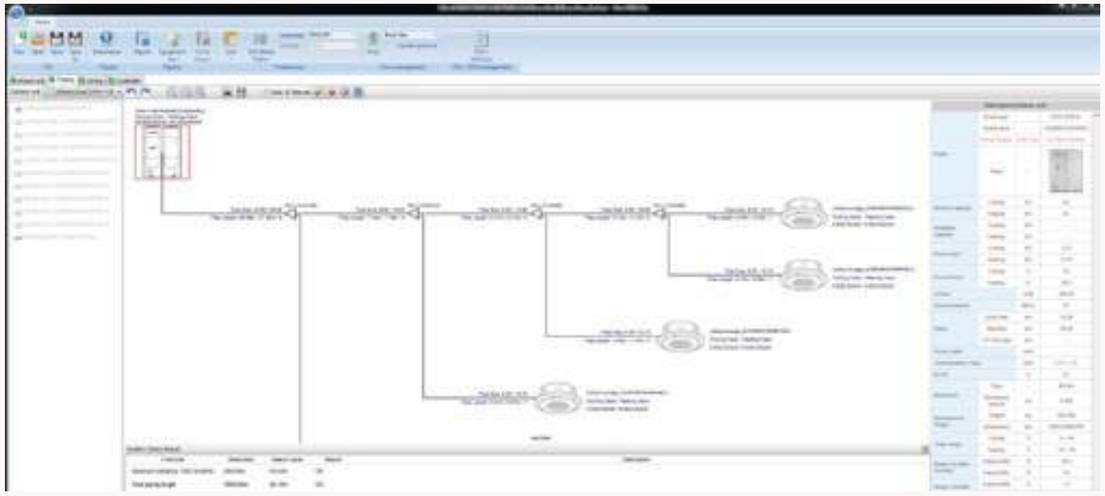

**Product selection**
List of equipment, including indoor units, outdoor units, controls and accessories

**Piping schematics**
Basic or manual selection with system check and capacity simulation

**Reports**
Specifications, diagrams in DWG & BMP format, quotations

**Control systems**
Automatic control unit selection

**Wiring schematics**
Automatic diagrams including communication wiring for indoor/outdoor/control units and electric power meters





## CAD mode

CAD Mode is an in-depth and precise design tool that enables users to design their air conditioning systems using AutoCAD software[1].

[1] Sourced separately.



**Pipe sizing & lengths**
Refrigerant & drain pipe sizing

**System check**
Installation regulation & refrigerant charging

**Automatic selection**
Refnet joint, header & distributor kit

**Performance simulation**
Capacity correction tool against specific design conditions

**Automatic report**
Piping installation

## How to access




**Register**

Go to **partnerhub.samsung.com/climate** to access the Samsung Climate Solutions Partner Portal[1]. If you do not have access yet, simply complete the registration process and you will be sent access details.




**Select tools**

Go to Technical Resources via the main menu and select the option Design Tools from the sub menu.




**Download**

Download the DVM-Pro installation file, view the user manuals, and start designing your project.

[1] Google Chrome is the recommended web browser for using the Samsung Climate Solutions Partner Portal.

# Samsung HVM Selection Tool

To support engineers in designing a Samsung HVM water-based VRF system, Samsung has created an easy-to-use selection tool with convenience in mind. This tool will help you design your whole system in a modular way, simplifying and speeding up the process. The Samsung HVM Selection Tool does not require any software installation and is freely accessible online, giving you a head start in creating and designing your projects for tomorrow.

## Easy system configuration

The drag and drop interface of the HVM Selection Tool enables you to configure the HVM system easily and quickly. Based on the configuration selected, the tool generates information such as total water flow and total system pressure drop, enabling you to select the appropriate water pump and piping. Values for cooling and heating are calculated automatically based on the design conditions selected for the project (room temperature, outside temperature, water temperature).






## Complete technical information

The HVM Selection Tool includes a detailed list of available outdoor Samsung HVM chiller units and indoor FCU units. It also includes an overview of accessories and essential hydronic components, and features the required efficiency data (SCOP, COP, SEER and EER). To enable the preadjustment of balancing valves, the detailed list of indoor units shows the water flow, pressure drop and pressure difference data for the water line holding the highest pressure drop.




## Automated project report

You can opt for a comprehensive annual energy consumption simulation, based on a fixed set of parameters and the climate zone selected for the heating mode (warm, average, cold). High resolution PDF documents can be generated showing the wiring diagrams and hydraulic diagrams for indoor units and outdoor units, including the pipe dimensions. The detailed project report is presented in a layout that is easy to understand.

## Tender specifications file

A tender specifications file can be generated that includes full product descriptions, feature explanations and complete technical data. You can also personalise the document by including additional information about the customer and the designer.




## How to access




**Access**

To access the HVM Selection Tool, open your web browser[1] and go to **hvm.openforce.com**. No additional software installation is required.




**Design**

Create your project, design the HVM system and generate an automated report and tender specifications file online.




**Support**

If you require support, please consult the manual that can be downloaded directly from the HVM selection tool.

[1] Google Chrome is the recommended web browser for using the Samsung Climate Solutions Partner Portal.

# Samsung specialist design support

Bringing together technical expertise and practical experience in climate system design, Samsung provides a single point of contact for the design and management of cooling and heating installations in buildings. With assistance ranging from 3D visualisations with BIM support to CFD analysis to optimise indoor thermal conditions and BREEAM assessments to achieve the best environmental performance, Samsung's specialist engineers are ready to support you in making your project a success.

## BIM support

Building Information Modelling (BIM) is an intelligent 3D model-based process for creating and managing information on the physical and functional characteristics of a building, across the project lifecycle and covering all parties involved, including the supply chain. BIM gives architects, engineers and construction professionals the insights and tools necessary to efficiently plan, design, construct and manage buildings and infrastructure.

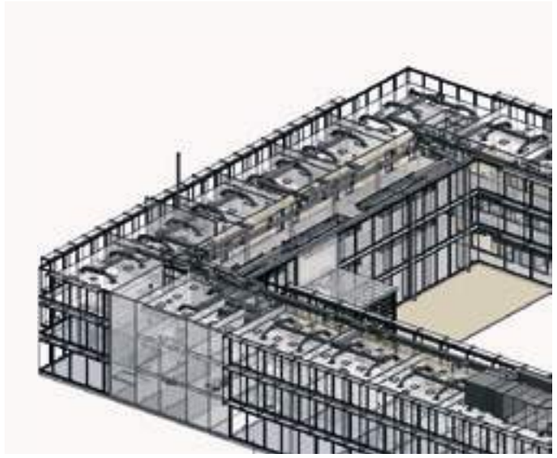

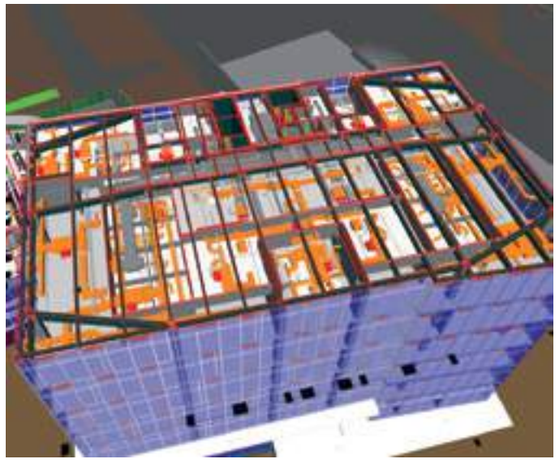

To support you as one of our Climate Solutions partners, Samsung has developed a full range of BIM models for all VRF and VRF Chiller products. You can download these 3D models directly from the BIM object library to start planning your project design. Alternatively, you can call on our qualified Samsung engineering team for dedicated project design support, using Revit® software to create 3D plans of the building including Samsung air conditioner installations.

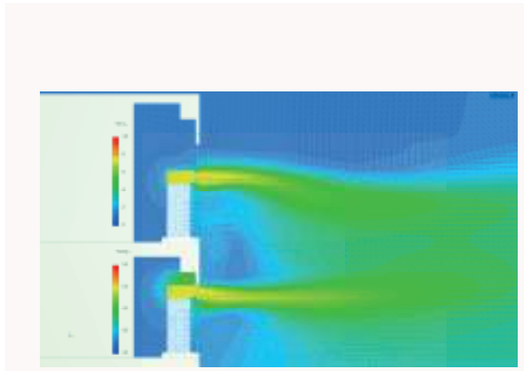

## CFD analysis

Computational Fluid Dynamics (CFD) uses numerical analysis and data structures to analyse thermal conditions in buildings. It allows the virtual testing and optimisation of various climate system configurations in the context of occupant comfort, energy efficiency and running cost. Samsung can offer you specialist CFD support that includes analyses such as indoor temperature profiling, airflow distribution and sound simulation.

## BREEAM evaluations

BREEAM (BRE[1] Environmental Assessment Method) is one of the most widely used environmental assessment methods and rating systems for buildings. It sets the standard for best practice in sustainable design and has become the de facto measure used to describe a building's environmental performance. Samsung's Accredited Professionals (APs) can support you in assessing the optimal installation for achieving a high certification score to match your green building programme.

[1] BRE (Building Research Establishment) is a leading, multidisciplinary building science centre based in the United Kingdom.



## How to obtain support




**BIM support**

To download Samsung BIM models, go tho Technical Resources on **partnerhub.samsung.com/climate**[1]. To request dedicated project design support from Samsung, please contact your Samsung representative.




**CFD analysis**

To obtain CFD analysis support from Samsung, please contact your Samsung representative. Certain conditions may apply, subject to the project.




**BREEAM evaluations**

Please contact your Samsung representative to request a BREEAM evaluation by one of Samsung's Accredited Professionals (APs).

[1] Google Chrome is the recommended web browser for using the Samsung Climate Solutions Partner Portal.

# Samsung Climate Solutions Academy

Samsung Climate Solutions Academy is committed to providing engineers with the technical skills required to install a Samsung product efficiently, and to help relay necessary information to users. All courses are designed to provide attendees with the opportunity to develop both theoretical and practical knowledge of Samsung's vast range of equipment and solutions.

## Samsung training centres in Europe












## Available training modules

### Essential courses: Basic commercial training

- The product line-up, accessories and available controls
- The unique features of Samsung products
- Installation considerations

### Advanced courses: Technical training

- How to correctly install and configure a system
- Commissioning: common issues during commissioning and how to resolve any challenges
- Troubleshooting and fault-finding (by use of E-codes)
- Control logic
- Case studies

### Advanced courses: Design training

- Understanding customers' needs and offering possible solutions
- DVM-Pro - Samsung's advanced design tool
- Case studies

Note: the registration process for and availability of training courses may vary per country. Please contact your Samsung representative for more information.

## How to register for training




**Search**

To check for available training courses, go to Samsung Business Academy (SBA) via the Samsung Climate Solutions Partner Portal[1]: **partnerhub.samsung.com/climate**. Search the online event calendar and select the training course you would like to attend.




**Register**

After identifying the training course you would like to attend, follow the registration process. Once you have registered successfully you will receive a confirmation e-mail.




**Get certified**

Following confirmation of your registration, we will invite you to one of our training centres. You will be trained by one of our specialised Master Trainers or Product Specialists, and receive a Certificate of Completion.

[1] Google Chrome is the recommended web browser for using the Samsung Climate Solutions Partner Portal.

# Notes



# Notes

# Notes



# Notes

# Notes



# Notes

# Notes



# Notes

# Notes



# Notes

# Notes

Notes

Learn more about Samsung Climate Solutions at:
**www.samsung.com/climate**

Copyright © 2020 Samsung Electronics Air Conditioner Europe B.V. All rights reserved. Samsung is a registered trademark of Samsung Electronics Co., Ltd. Specifications and designs are subject to change without notice and may include preliminary information. Non-metric weights and measurements are approximate. All data was deemed correct at the time of creation. Samsung is not liable for errors or omissions. Some images may be digitally altered. All brand, product, service names and logos are trademarks and/or registered trademarks of their respective owners and are hereby recognised and acknowledged.

Samsung Electronics Co., Ltd. participates in the Eurovent Certification Programme (ECP) for Air Conditioners (AC), Variable Refrigerant Flow (VRF) and Liquid Chilling Packages Heat Pump (LCP-HP). To check the ongoing validity of certification, please visit: www.eurovent-certification.com

**Samsung Electronics Air Conditioner Europe B.V.**
Evert van de Beekstraat 310, 1118 CX Schiphol
P.O. Box 75810, 1118 ZZ Schiphol
+31 (0)8 81 41 61 00
The Netherlands

SAMSUNG