SAMSUNG

Climate Solutions



Product Catalogue

Eco Heating Systems

2019

Table of contents

1.03 General
About Samsung Climate Solutions
Innovation Milestones
Reference Sites
Protecting the Environment
Samsung Climate Solutions Partner Portal NEW
Samsung EHS Simulation Tool NEW
Samsung Climate Solutions Academy
Product Categories
Product Range
Product Lineup
Product Selection Table
Product Nomenclature
Featured Products

2.01 Mono
ClimateHub Mono NEW
Mono NEW
Mono Control Kit
Wi-Fi Kit NEW

3.01 Split
ClimateHub Split NEW
Split NEW
Wi-Fi Kit NEW

4.01 TDM Plus
TDM Plus
TDM Plus Wall-Mounted Triangle
TDM Plus Slim Duct
TDM Plus MSP Duct
TDM Plus Console
Wi-Fi Kit

5.01 Controls
Lineup
Specifications
Dimensional Drawings

6.01 Accessories

Project: Atico en el Retiro (Spain)
Project Architecture: ÁBATON
Interior Design: BATAVIA
Photography: Belén Imaz

The information contained in this document may include preliminary values or be missing values which were not yet available at the time of creation.
To obtain the most current information, please refer the Samsung Climate Solutions Partner Portal at **partnerhub.samsung.com/climate**, or consult your direct Samsung contact.

About Samsung Climate Solutions

Samsung Electronics has come a long way since introducing its first air conditioner in 1974. Since entering the European commercial air conditioning market in 2005, we have experienced rapid growth and support for our expanding global operations in climate systems. Samsung Electronics Co., Ltd. opened Samsung Electronics Air Conditioner Europe B.V. in Amsterdam at the start of 2017. In order to achieve mutual growth and success going forward, both the staff at our European headquarters, as well as our local teams strive to provide the best level of service and support to our partners across more than 30 European countries.

It is our mission at Samsung to provide cutting-edge innovations in climate-based initiatives, as well as lasting digital connectivity solutions. Samsung is proud to offer ongoing training, technical support and unique distribution operations, and prides itself on fulfilling the needs of the European market when it comes to cooling, heating, domestic hot water, ventilation and smart building solutions—particularly across retail, hotel, office and home environments.

17 Samsung Offices

8 Warehouses

9 Training Centres



General

Innovation Milestones

Samsung has been manufacturing air conditioners and challenging the status quo of the industry for over 40 years. Thanks to cutting-edge innovations in design and technology, we will continue to aspire to be a leader in the cooling and heating industry in the years to come.

1974

Began WAC Production

1975

Began RAC Production



1985

Began Inverter RAC / FAC / PAC Production



1992

Began SAC Production



2000

First Launched DVM Water

2007

Launched World's Largest Capacity DVM+4 (22HP, Max 88HP)



2012

Launched Wi-Fi Control RAC (Jungfrau)

2013

Launched Triangle Design RAC (A3050)



2015

Introduced World's First 360 Cassette 30HP DVM



2017

Launched Wind-Free™

2018

Extended Wind-Free™ With Cassette Range



2019

Launched Samsung ClimateHub



General

Reference Sites

From a shopping centre in Albania to an office building in Poland, Samsung is proud to have brought innovative climate solutions to Europe, without compromising on interior design. In fact, some of our achievements prove that functional indoor units can bring exciting modern touches to historic spaces.





Toptani Plaza Shopping
Tirana, Albania





Mr Brown Restaurant
Milan, Italy





Hotel
Dijon, France





Spire Tower
Warsaw, Poland

Shopping Centre
Venice, Italy









Residential Apartments
Barcelona, Spain





Office Building
Edam,
The Netherlands

General

Protecting The Environment

Across its global business operations, Samsung endeavours to comply with European and national laws and regulations, as well as international environmental standards. Samsung actively works towards minimising the generation of harmful materials, utilising resources efficiently, and recycling waste products for the benefit of the environment. Samsung will do its best to conduct environmental improvement activities across all product development, production, distribution, sales and disposal processes.



WEEE: Electronic Waste

Samsung works within the WEEE (Waste of Electrical and Electronic Equipment) regulations, which forms the Directive for extended producer responsibility. This Directive stipulates encourage the safe collection, treatment, recycling and environmentally-sound disposal of all electrical and electronic equipment. Working with collective recycling schemes in each EU member state, Samsung co-finances the take-back and recycling of electronic products.

Packaging

Samsung works together with recycling schemes and governmental organisations to collect, separate and re-use all packaging materials at various points in the distribution chain. Many materials can be recycled into new products and recycling helps to save natural resources. Recycling packaging helps to re-use valuable raw materials and to reduce the overall impact on the environment.

Batteries

Samsung has been giving new life to used batteries by funding collection, treatment and recycling by local battery recycling organisations.

Ecodesign

Samsung complies with the Ecodesign regulations, issued in March 2012, which require air conditioners (<12kW) and comfort fans (<125kW) within the EU to display detailed, highly visible information regarding energy efficiency, plus information on Coefficient of Performance (COP), Energy Efficiency Ratio (EER) and annual energy consumption (kW/h).

Addressing Global Warming With R32 Refrigerant

R32

Following the introduction of EU legislation on the reduction of F-gas emissions, Samsung presents a new range of Eco Heating Systems across Mono and Split models. These systems feature R32 refrigerant which has a Global Warming Potential (GWP) of 675—a significantly lower GWP than that of R410A (2088).

These new products are more environmentally-friendly than their R410A based predecessors. R32 has 68%* lower Global Warming Potential in comparison with R410A, is non-toxic and easy to recycle. It has an Ozone Depletion Potential (ODP) of zero, a high refrigeration capacity, and thermal conductivity, meaning maximum efficiency and a 30% reduction in charging volume.

* Comparison between R410A and R32 GWP figures as per: reporting from the European Commission.

Environmental impact: R410A compared to R32

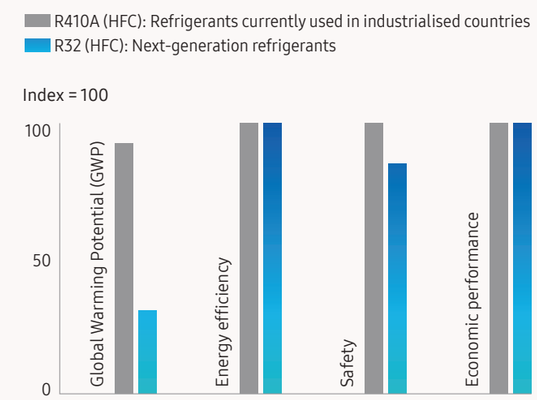

Making Energy Efficiency Clear

The following electrical heat pumps have been subject to Energy labelling EU No 811/2013 and Ecodesign EU No 813/2013 requirements: Space heaters (boiler space heaters, cogeneration space heaters, heat pump space heaters, low-temperature heat pumps, boiler combination heaters, heat pump combination heaters) and Packages (space heater or combination heater + temperature control + solar device).

As of September 2019, the energy efficiency scale has changed as below:

- Seasonal space heating energy efficiency class—the current scale from A++ to G will move to A+++ to D.
- Water heating energy efficiency class for the declared load profile for combination heat pumps—the current scale from A to G will move to A+ to F.

The energy labels should provide the minimum required information such as: supplier's name, product model code, the rated output under three European climates (average, colder and warmer) for medium- and/or low-temperature applications (55 °C and 35 °C), European map displaying the three temperature zones and the sound power level indoors and/or outdoors. In addition, energy labels should also include a pictogram showing combination heat pumps that are only able to operate during off-peak hours.

Energy Label as of September 2019

Heat pump combination heaters

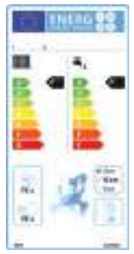

Heat pump space heaters



Samsung Climate Solutions Partner Portal



General

A Resource Bank for All Things Samsung

As one of Samsung's registered Climate Solutions partners, you will have access to our Partner Portal and its many benefits. Whether you are looking for marketing materials or technical product documentation, requesting technical support or subscribing for training, the Samsung Climate Solutions Partner portal offers you everything you need to consistently deliver the best results.

Access Technical Resources

The Technical Resources section allows you to find all relevant information to understand the product's functionality and to prepare and design projects. Ranging from technical data books, BIM files and certificates to exploded views, drawings and different kinds of manuals, a library full of technical information is at your fingertips.



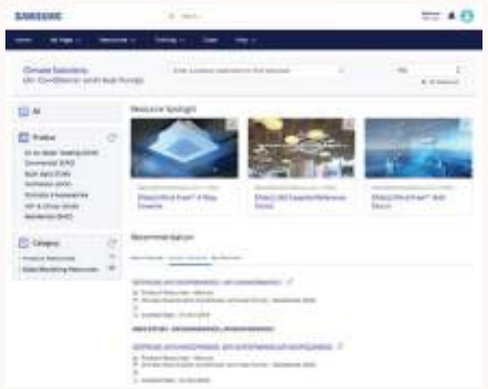

Obtain Marketing Resources

Potential buyers like to know you are on the cutting edge of Samsung's latest innovations. To allow you to align with Samsung's marketing initiatives, the Partner Portal provides you with useful downloadable assets such as images and videos, designed to make your marketing activities easy and effective.



Request Technical Support

Through the Samsung Partner Portal you can easily request technical support by raising your case using our built-in ticketing system. You can rest assured that our well-trained technical experts will work to solve your issue as soon as possible.

Register for Training

If you are dedicated to becoming a Samsung climate solutions expert, you can access Samsung's educational portal for training sessions by experienced trainers. The portal allows you to search for online courses and materials, test your climate solutions knowledge, and more.
The Samsung Business Academy is here to help you succeed.*

* The registration process and availability of training courses may differ per country. Please contact your direct Samsung contact person for more information.



How to Access

1 Register

To register for the Samsung Climate Solutions Partner Portal, open your web browser* and go to **partnerhub.samsung.com/climate** to complete the registration form.

2 Access

Your information will be verified and your account will be activated. You will receive your personal login credentials.

3 Manage account

Keep your account details up to date and invite your colleagues to join.

4 Search and download

Access a full library of resources, request technical support, or sign up for a Climate Solutions Academy training session.

* The recommended web browser for using the Samsung Climate Solutions Partner Portal is Google Chrome.

General

General

Samsung EHS Simulation Tool

Selecting the Right Heating System

The Samsung EHS Simulation Tool has been created to facilitate easy product selection, and to generate energy consumption and cost simulations based on various scenarios. By selecting a region/city, you can get average annual temperatures, a simulated heating load based on the home's specific size, desired leaving water temperatures and more. Additionally, the system is designed to support multiple languages.



Setting Conditions

The General Conditions section enables you to select the country of residence and a nearby city to obtain average temperatures for both summer and winter. In this section you should specify the area to be heated, the maximum heating load required and the home's indoor temperature design.

Equipment Selection

Start to design your system in the Equipment section. With various options including Mono, Split and TDM Plus, there is an option for everyone. You can choose solar panel connections, your desired leaving water temperature, the size of the tank in certain applications and more.





Comparison Charts

This section is where the bulk of the information is generated—from monthly heating load, annual energy consumption and cost simulation to economic feasibility analysis. This information can then be exported to a pdf document using the Report Printing function.

Report Printing

The Report Printing section allows you to compile all of the information from previous sections into a user-friendly document. There is also the possibility for heating installation and/or distribution companies to add their own company details and logo to the report.



How to Access

1 WWW

Register

Go to **partnerhub.samsung.com/climate** to access the Samsung Climate Solutions Partner Portal*. If you do not have access yet, simply complete the registration process and you will be sent access details.

2

Select tools

Go to Technical Resources via the main menu and select the option Design Tools from the sub menu.

3

Download

Download the EHS Simulation Tool installation file, view the user manual, and start your project.

* The recommended web browser for using the Samsung Climate Solutions Partner Portal is Google Chrome.

General

General

Samsung Climate Solutions Academy

Become a Samsung Climate Solutions Expert

Samsung Climate Solutions Academy is committed to providing engineers with the technical skills required to install a Samsung product efficiently, and to help relay necessary information to users. All courses are designed to provide attendees with the opportunity to develop both theoretical and practical knowledge of Samsung's vast range of equipment and solutions.

Samsung Training Centres in Europe

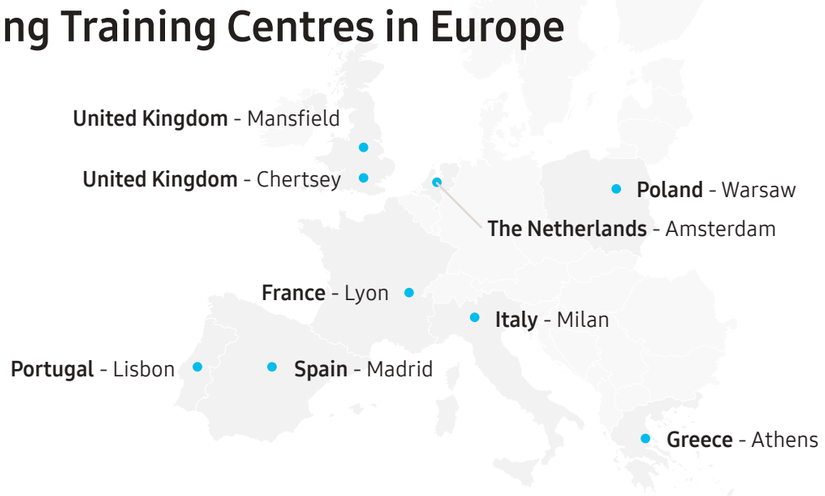









Available Training Modules

Essential Courses: Basic Commercial Training

- The product lineup, accessories and available controls
- The unique characteristics of Samsung products
- Installation considerations

Advanced Courses: Technical Training

- How to correctly install and configure a system
- Commissioning: Common issues during commissioning and how to resolve any challenges
- Troubleshooting and fault finding (by use of E-codes)
- Control logic
- Case studies

Advanced Courses: Design Training

- Understanding customers' needs and offering possible solutions
- DVM-Pro - Samsung's advanced design tool
- Case studies

Note: the registration process and availability of training courses may differ per country. Please contact your direct Samsung contact person for more information.

How to Register for Training



Search

To check for available training courses, go to Samsung Business Academy (SBA) via the Samsung Climate Solutions Partner Portal*: **partnerhub.samsung.com/climate**. Search the online event calendar and select the training course you would like attend.



Register

When you have identified the training course you would like attend, follow the registration process. Once you have registered successfully you will receive a confirmation e-mail.



Get Certified

Once we have confirmed your registration, we will welcome you to one of our training centres. You will be trained by one of our specialised Master Trainers or Product Specialists, and receive a Certificate of Completion.

* The recommended web browser for using the Samsung Climate Solutions Partner Portal is Google Chrome.

General

Product Introduction



General

Product Categories

Mono

With its Tank Integrated Hydro Unit, ClimateHub Mono works as a total Samsung solution. Thanks to the Samsung Mono control kit, the Mono can connect to third party equipment such as a Domestic Hot Water (DHW) tank.
A ClimateHub Mono or Mono configuration consists of a single outdoor unit, that includes the hydronic components and therefore eliminates the need to make space for refrigerant piping, making it easy to install and use.
The potential of the ClimateHub Mono system can be maximised by connecting to Smart Grid or Solar Power (PV).

ClimateHub Mono

Total integrated Samsung solution.

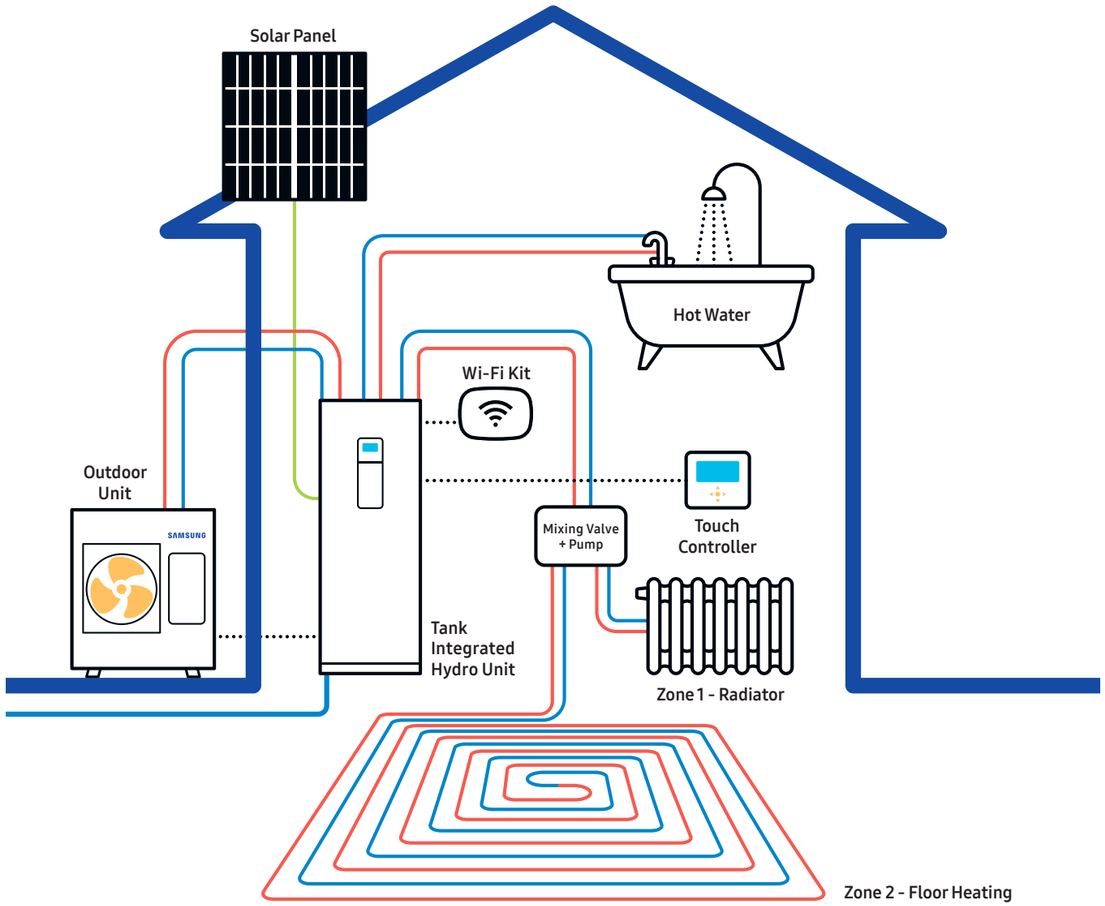

Schematic drawings are for illustrative purposes only. For accurate installation information please consult the technical data book.
Solar panels, underfloor heating panels, radiators and non-integrated components are not provided by Samsung unless specified otherwise.

Mono

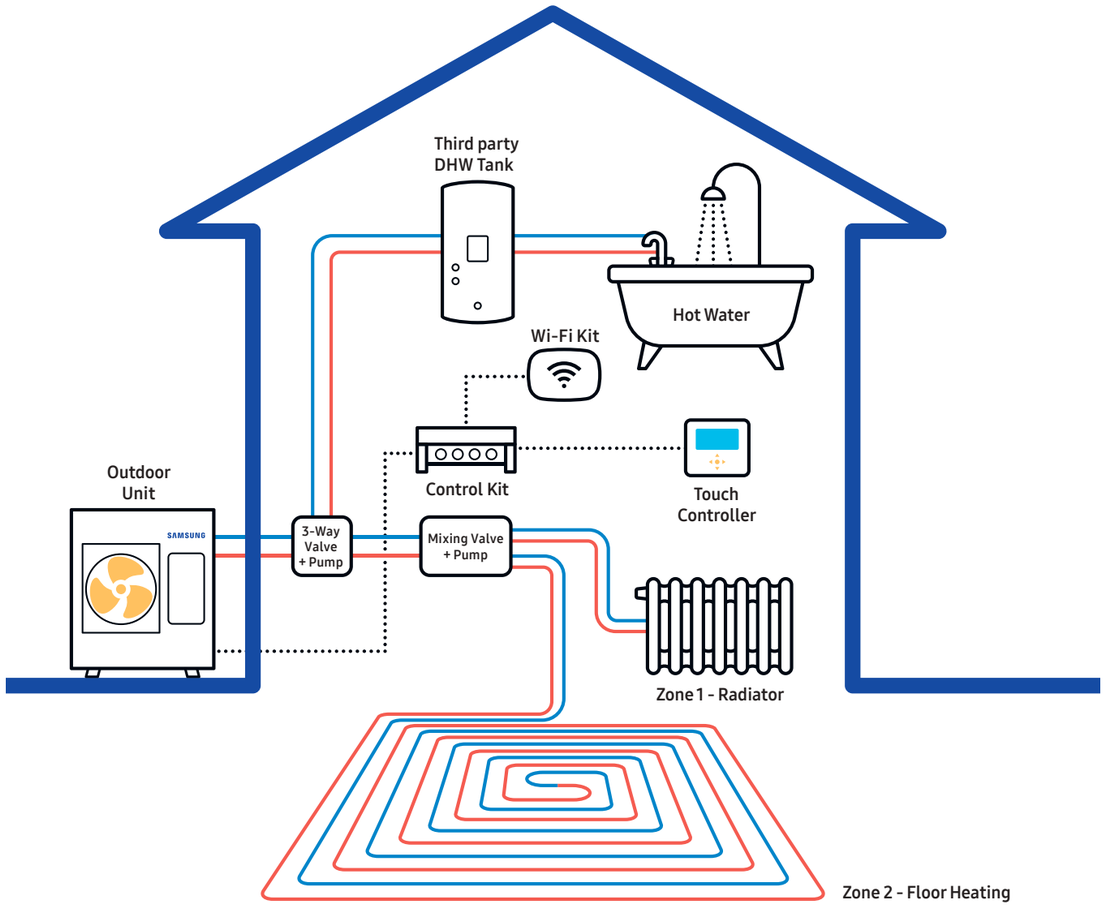

Schematic drawings are for illustrative purposes only. For accurate installation information please consult the technical data book.
Third party DHW tank, underfloor heating panels, radiators and non-integrated components are not provided by Samsung unless specified otherwise.

General

Product Categories

Split

With its Tank Integrated Hydro Unit, ClimateHub Split works as a total Samsung solution, whereas the Split can be combined with third party equipment. The single outdoor unit is connected by refrigerant pipes using either the Tank Integrated Hydro Unit or a wall-mounted Hydro Unit. The latter combines with a third party Domestic Hot Water (DHW) tank to suit all requirements. When used with the Hydro Unit, the Split enables production of domestic hot water and underfloor heating/cooling, and heating of radiators. The potential of your system can be maximised by connecting to Smart Grid or Solar Power (PV).

ClimateHub Split

Total integrated Samsung solution.

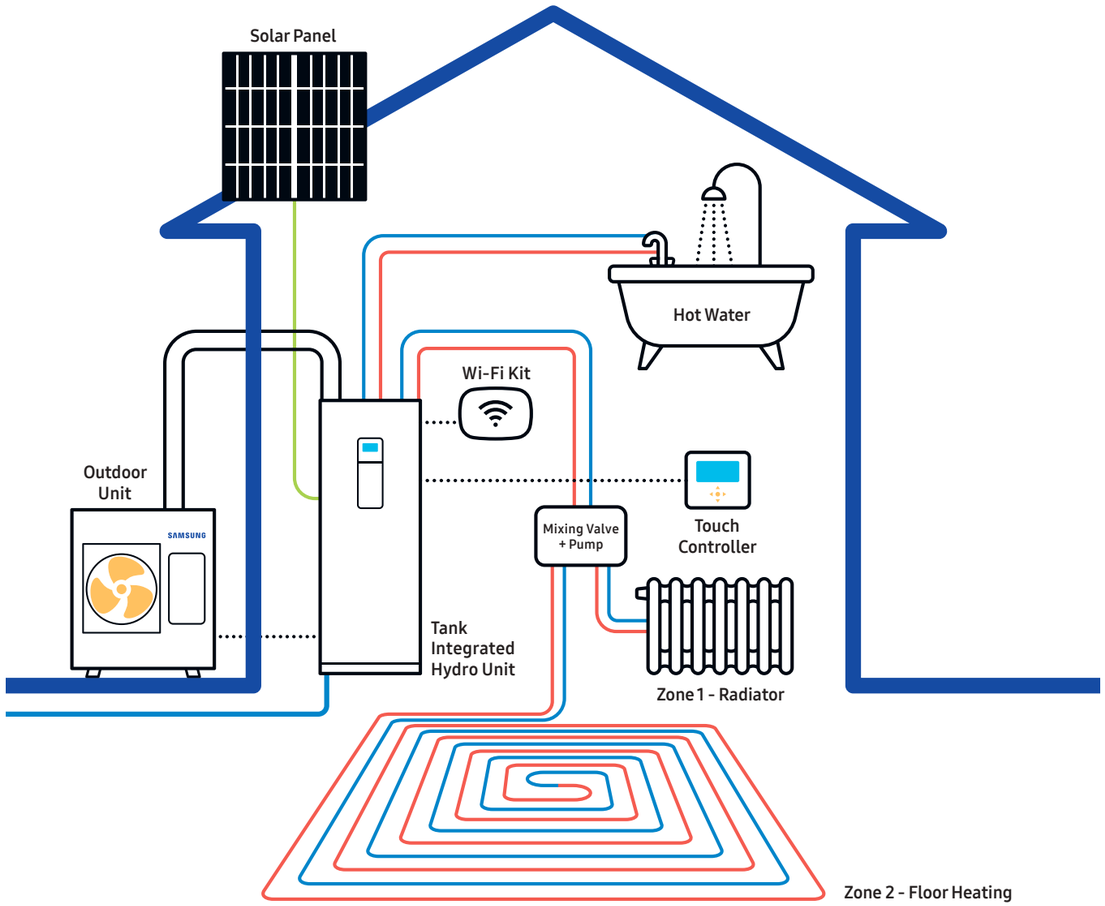

Schematic drawings are for illustrative purposes only. For accurate installation information please consult the technical data book.
Solar panels, underfloor heating panels, radiators and non-integrated components are not provided by Samsung unless specified otherwise.

Split

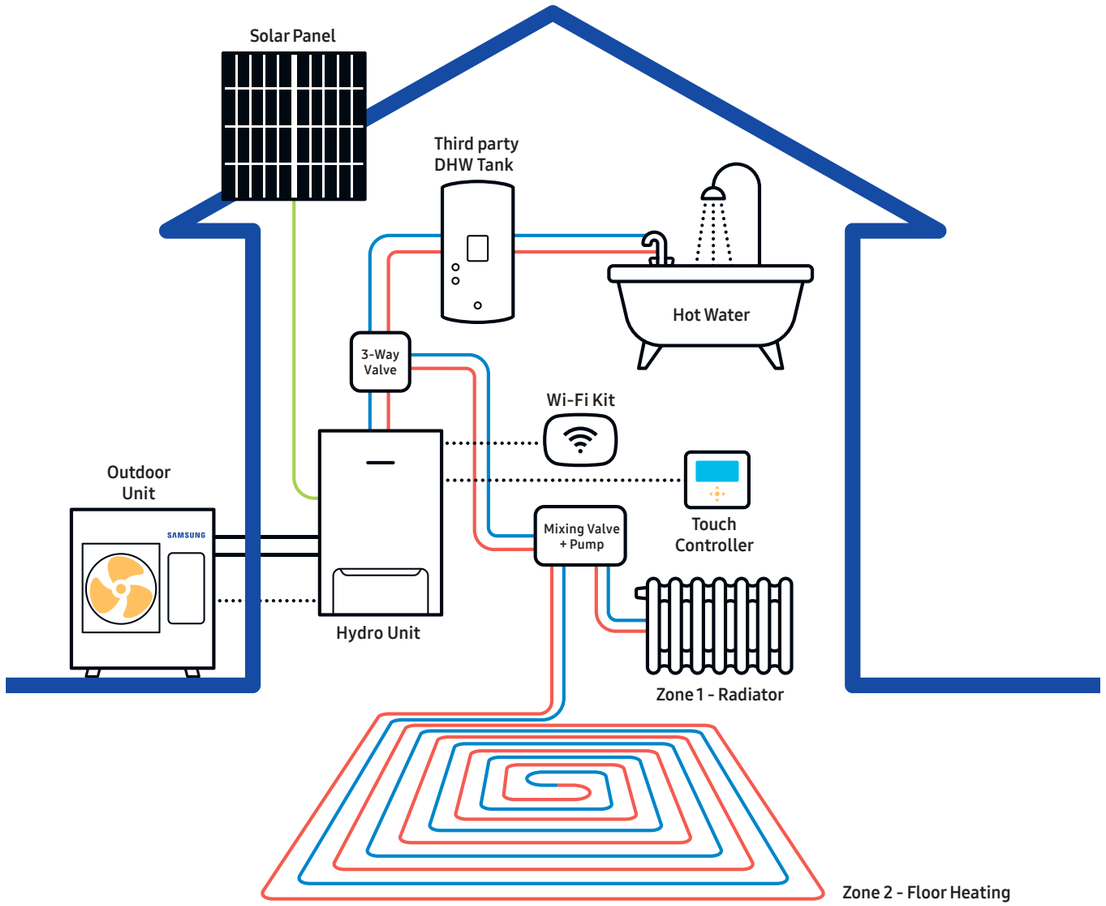

Schematic drawings are for illustrative purposes only. For accurate installation information please consult the technical data book.
Third party DHW tank, solar panels, underfloor heating panels, radiators and non-integrated components are not provided by Samsung unless specified otherwise.

Product Categories

TDM Plus

The TDM Plus system is an 'All-In-One' Air-to-Water (A2W) and Air-to-Air (A2A) system for a complete home climate solution. It can be used throughout the year for cooling and heating to meet a variety of different user situations and needs. It enables underfloor heating/cooling and radiator heating, as well as offering air-to-air cooling with various options for air conditioning.

TDM Plus

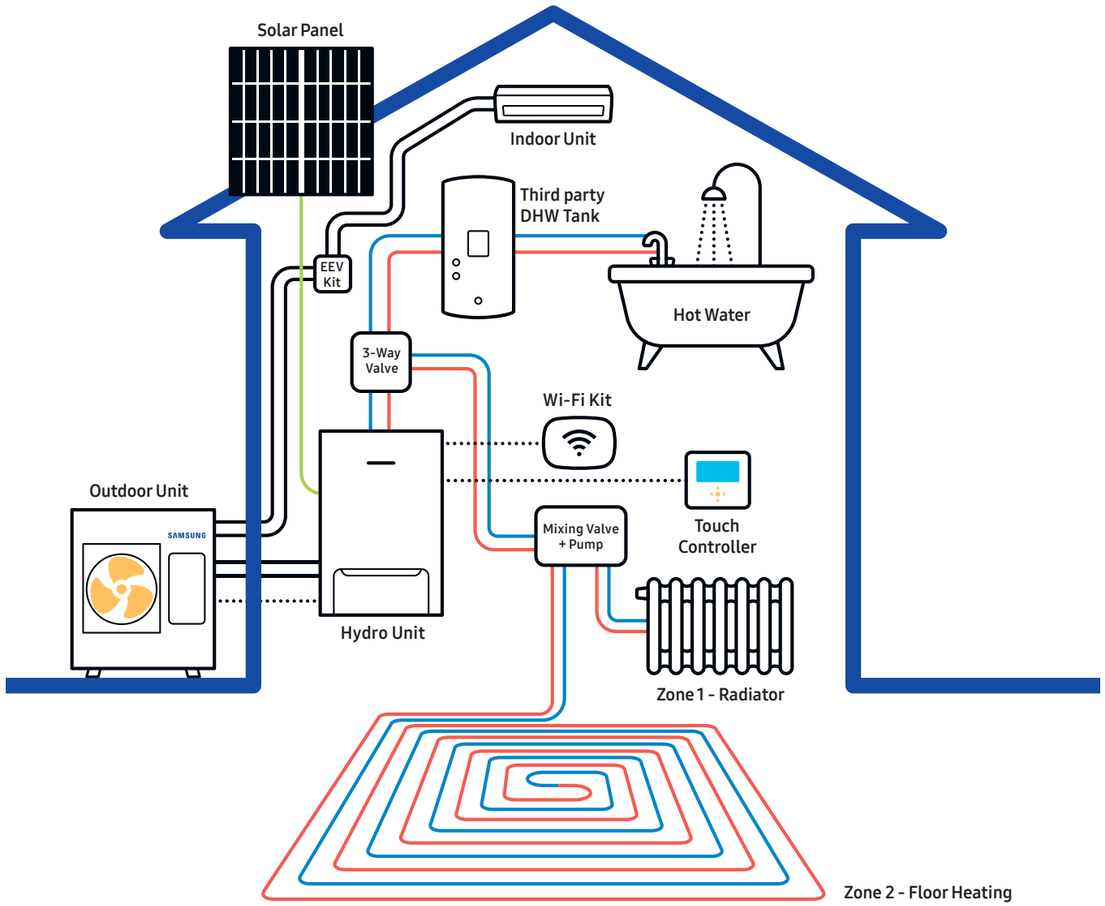

Schematic drawings are for illustrative purposes only. For accurate installation information please consult the technical data book.
Third party DHW tank, solar panels, underfloor heating panels, radiators and non-integrated components are not provided by Samsung unless specified otherwise.

Project: Casa L (Spain)
Project Architecture: ÁBATON
Interior Design: BATAVIA
Photography: Carlos Muntadas

Product Range

Mono



5kW Outdoor Unit



8kW Outdoor Unit



12 & 16kW Outdoor Unit



Tank Integrated Hydro Unit



Control Kit

Split



4 & 6kW Outdoor Unit



9kW Outdoor Unit



12 & 16kW Outdoor Unit (R410A)



Tank Integrated Hydro Unit



Wall-Mounted Hydro Unit

TDM Plus



4.4 & 6.6kW Outdoor Unit



9kW Outdoor Unit



12 & 16kW Outdoor Unit



Wall-Mounted Triangle



Slim Duct



MSP Duct



Console



Wall-Mounted Hydro Unit

Controllers



Wireless



Wired



Centralised

Lineup

ClimateHub

Samsung ClimateHub



R32 Outdoor Unit



Tank Integrated Hydro Unit

Type	Power	Model Name	Capacity	Tank Integrated Hydro Unit (Mono) 200L(1Φ) AE200RNWMEG/EU	Tank Integrated Hydro Unit (Mono) 260L(1Φ) AE260RNWMEG/EU	Tank Integrated Hydro Unit (Mono) 260L(3Φ) AE260RNWMGG/EU	Tank Integrated Hydro Unit (Split) 200L(1Φ) AE200RNWSEG/EU	Tank Integrated Hydro Unit (Split) 260L(1Φ) AE260RNWSEG/EU	Tank Integrated Hydro Unit (Split) 260L(3Φ) AE260RNWSGG/EU
R32 Outdoor Unit	Mono	1Φ	AE050RXYDEG/EU	5kW	●					
			AE080RXYDEG/EU	8kW	●	●				
			AE120RXYDEG/EU	12kW	●	●				
			AE160RXYDEG/EU	16kW	●	●				
		3Φ	AE080RXYDGG/EU	8kW			●			
			AE120RXYDGG/EU	12kW			●			
			AE160RXYDGG/EU	16kW			●			
	Split	1Φ	AE040RXEDEG/EU	4kW				●	●	
			AE060RXEDEG/EU	6kW				●	●	
			AE090RXEDEG/EU	9kW				●	●	
		3Φ	AE090RXEDGG/EU	9kW						●

TDM Plus

TDM Plus ODU & Wall-Mounted Hydro Unit



Outdoor Unit



Wall-Mounted Hydro Unit



DHW Tank (third party)

Type	Power	Model Name	Capacity	Wall-Mounted Hydro Unit Split(1Φ) AE090MNYDEH/EU	Split(1Φ) AE160MNYDEH/EU	Split(3Φ) AE090MNYDGH/EU	Split(3Φ) AE160MNYDGH/EU
R410A TDM Plus Outdoor Unit	Split	1Φ	AE044MXTPEH/EU	4.4kW	●		
			AE066MXTPEH/EU	6.6kW	●		
			AE090MXTPEH/EU	9kW	●		
			AE120MXTPEH/EU	12kW		●	
			AE160MXTPEH/EU	16kW		●	
		3Φ	AE090MXTPGH/EU	9kW			●
			AE120MXTPGH/EU	12kW				●
			AE160MXTPGH/EU	16kW				●

TDM Plus IDU









Capacity	Type Wall-Mounted Triangle	Slim Duct	MSP Duct	Console
2.2kW	●	●		●
2.8kW	●	●		●
3.6kW	●	●		●
5.6kW	●	●		●
7.1kW	●		●	
9.0kW			●	

Lineup

EHS with Third Party DHW Tank

Mono with Third Party DHW Tank



Outdoor Unit



Control Kit



DHW Tank
(third party)

Type		Power	Model Name	Capacity	Mono MIM-E03CN
R32 Outdoor Unit	Mono	1Φ	AE050RXYDEG/EU	5kW	●
			AE080RXYDEG/EU	8kW	●
			AE120RXYDEG/EU	12kW	●
			AE160RXYDEG/EU	16kW	●
		3Φ	AE080RXYDGG/EU	8kW	●
			AE120RXYDGG/EU	12kW	●
			AE160RXYDGG/EU	16kW	●

Split with Third Party DHW Tank



Outdoor Unit



Wall-Mounted
Hydro Unit



DHW Tank
(third party)

Type	Power	Model Name	Capacity	Wall-Mounted Hydro Unit Split(1Φ) AE090RNYDEG/EU	Split(3Φ) AE090RNYDGG/EU
R32 Outdoor Unit	Split	1Φ	AE040RXEDEG/EU	4kW	●	
			AE060RXEDEG/EU	6kW	●	
			AE090RXEDEG/EU	9kW	●	
		3Φ	AE090RXEDGG/EU	9kW	●	●
					AE160JNYDEH/EU	AE160JNYDGH/EU
R410A Outdoor Unit	Split	1Φ	AE120JXEDEH/EU	12kW	●	
			AE160JXEDEH/EU	16kW	●	
		1Φ	AE120JXEDGH/EU	12kW		●
			AE160JXEDGH/EU	16kW		●

General

EHS Selection Table

		ClimateHub	Mono R32 with Third Party DHW Tank	Split R32 with Third Party DHW Tank	Split R410A with Third Party DHW Tank	TDM Plus
						
		EHS Lineup				
		Mono / Split R32 Samsung ClimateHub Solution Outdoor Unit + Tank Integrated Hydro Unit	Mono R32 Control Kit + Outdoor Unit + Third Party DHW Tank	Split R32 Wall-Mounted Hydro Unit + Outdoor Unit + Third Party DHW Tank	Split R410A Wall-Mounted Hydro Unit + R410A Outdoor Unit + Third Party DHW Tank	TDM Plus R410A Air-to-Air & Air-to-Water Solution Wall-Mounted Hydro Unit + Outdoor Unit + Third Party DHW Tank + Air Conditioning
Main Function	A2W Cooling	●	●	●	●	●
	A2W Heating	●	●	●	●	●
	A2W Domestic Hot Water	●	●	●	●	●
	A2A Cooling					●
	Maximum Allowable IDU Connections					up to 7 IDU
Comfort	Colour Display	●	●	●		
	Low Noise[1]	●	●	●	●	●
	Outing	●	●	●	●	●
	Schedule / Holiday Mode	●	●	●	●	●
	Emergency Operation	●	●	●	●	●
Feature	Wi-Fi Enabled	●	●	●	●	●
	Wired Remote Controller	●[2]	●	●	●	●
	Zone Controller	●	●[3]	●	●	●
	Mixing Valve	●	●	●	●	●
	3-Way Valve	●	●[4]	●[4]	●[4]	●
	2-Way Valve	●	●	●	●	●
	Thermostat Control	●	●	●	●	●
	PV Integrated	●		●		
	Smart Grid Ready	●		●		
	Power Consumption Monitoring	●	●	●		
	Set FSV with SD Card	●				
Smart Install	Smart Checking	●	●	●	●	●

[1] Sound pressure level is a relative value, depending on the distance and acoustic environment. Sound pressure level may differ depending on operation conditions.
[2] Wired Remote Controller to be ordered separately. [3] In combination with an external thermostat. [4] Not provided by Samsung.

General

Product Nomenclature

Indoor units

AE	260	R	N	W	S	E	G
1	2	3	4	5	6	7	8

1	Classification	AE	EHS
2	Capacity		x1/10kW (3 digits)
			x Litre (3 digits)
3	Year	J	2015
		M	2017
		R	2019
4	Product Type	N	Indoor Unit (NASA)
5	Product Notation	A	RAC Wall-Mounted
		J	Console
		L	LSP Duct
		M	MSP Duct
		W	Tank Integrated Hydro
		Y	Wall-Mounted Hydro
6	Feature	D	Standard
		P	
		M	Mono
		S	Split
7	Rating Voltage	E	1Φ, 220~240V, 50Hz
		G	3Φ, 380~415V, 50Hz
8	Mode	G	R32 Heat Pump
		H	R410A Heat Pump

Outdoor units

AE	090	R	X	E	D	E	G
1	2	3	4	5	6	7	8

1	Classification	AE	EHS
2	Capacity		x1/10kW (3 digits)
3	Year	J	2015
		M	2017
		R	2019
4	Product Type	X	Outdoor Unit (NASA)
5	Product Notation	E	Split
		T	TDM Plus
		Y	Mono
6	Feature	D	Standard
		P	
7	Rating Voltage	E	1Φ, 220~240V, 50Hz
		G	3Φ, 380~415V, 50Hz
8	Mode	G	R32 Heat Pump
		H	R410A Heat Pump

General

Featured Products

ClimateHub

Compact Design

The Samsung ClimateHub solution is built around a compact tank integrated hydro unit, with a large domestic hot water tank of either 200L or 260L. The compact and modular design makes for straightforward kitchen or utility room integration.



Smooth Servicing

With a conveniently placed servicing window and intuitive servicing options available through the use of a Micro SD card or the Samsung S-Checker Mobile App, troubleshooting and start-up can be done easily from the front of the unit.*

* Please refer to your direct Samsung contact person for more information about the S-Checker Mobile App.



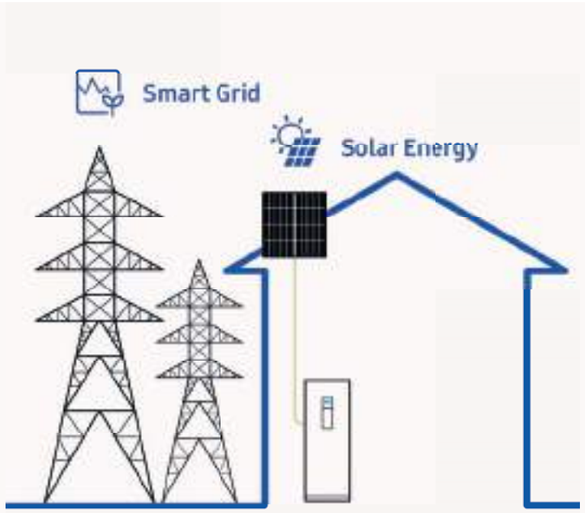

Smart Grid Ready & PV Enabled

A Smart Grid efficiently integrates the behaviour and actions of all the users connected to it. Smart Grid readiness enables users to benefit from an economically efficient and sustainable power supply. Thanks to the PV (Photovoltaic or 'solar' energy) enabled feature, the system can be connected to solar panels, saving energy through renewable sources.



Intuitive Control

Samsung has introduced a new touch controller with multiple language options and bright colour display—enabling temperature settings, energy monitoring, summer time setting and quick error monitoring.*

* The image shows an application example and is for illustrative purposes only. Please always check latest information for understanding availability of language versions.

General

Featured Products

ClimateHub

Smart Connectivity

The new touch controller enables users to manage differing temperature settings per zone, meaning high-temperature radiators and low-temperature floor heating can be utilised efficiently. Using the optional Wi-Fi Kit, the different aspects of the system can be controlled through the Samsung SmartThings App on your smartphone.*

* Available on iPhones and Android devices. A network connection is required. Samsung application account is necessary.

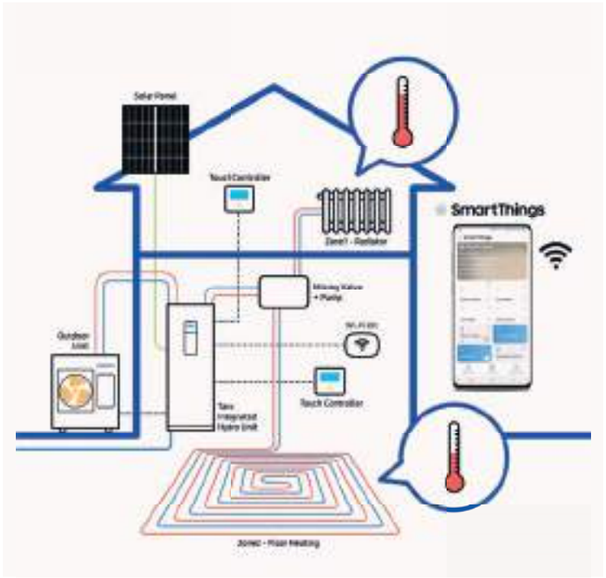

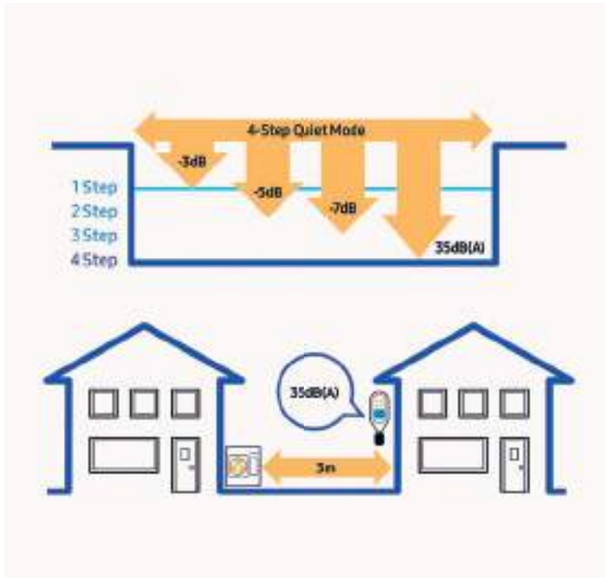

Quiet Operation

In order to meet increasingly strict sound level requirements, Samsung ClimateHub allows to reduce noise levels using the 4-Step Quiet Operation mode. Subject to specific models and particular operation conditions, it is possible to achieve levels as low as 35dB(A).

General

Project: Atico en el Retiro (Spain)
Project Architecture: ÁBATON
Interior Design: BATAVIA
Photography: Belén Imaz

Mono

Project: Atico en el Retiro (Spain)
Project Architecture: ÁBATON
Interior Design: BATAVIA
Photography: Belén Imaz

Specifications

ClimateHub Mono R32 A+++

- Integrated solution for heating and domestic hot water
- Compact unit size with large water tank (200L & 260L)
- Intuitive, colour screen touch controller in multiple languages
- Energy monitoring through touch controller
- Smooth servicing through the front-mounted service window
- PV and Smart Grid ready
- 2-zone control, suitable for floor heating and radiators
- SCOP rating of A+++*
- SmartThings compatible with optional Wi-Fi Kit
- Backup heater is included to ensure continuous heating






	Indoor Unit Outdoor Unit Controller				AE200RNWMEG/EU AE050RXYDEG/EU MWR-WW10N	AE200RNWMEG/EU AE080RXYDEG/EU MWR-WW10N	AE200RNWMEG/EU AE120RXYDEG/EU MWR-WW10N
System	Operation	Nominal Capacity	Heating A7/W35[1] / A7/W55[2]	W	5.000/4.300	8.000/7.100	12.000/11.300
			Cooling A35/W18[1]	W	5.000	7.500	12.000
		Power Input (Nominal)	Heating A7/W35[1] / A7/W55[2]	W	1.030/1.520	1.770/2.530	2.650/3.730
			Cooling A35/W18[1]	W	1.140	1.900	2.770
		COP (Nominal Heating) A7/W35[1] / A7/W55[2]		W/W	4,85/2,83	4,52/2,81	4,53/3,03
		EER (Nominal Cooling) A35/W18[1]		W/W	4,39	3,95	4,33
		SCOP LWT 35°C/ 55°C		W/W	4,46/3,2	4,44/3,23	4,69/3,51
		Average Seasonal Space Heating Eff. Class* LWT 35°C/ 55°C		-	A+++/A++	A+++/A++	A+++/A++
		Current	MCA	A	16,00	22,00	28,00
			MFA	A	20,00	27,50	35,00
		Water Flow Rate	Min	l/min	7,00	7,00	12,00
			Max	l/min	48,00	48,00	58,00
		Leaving Water Temperature[3]	Heating	°C	15~65	15~65	15~65
			Cooling	°C	5~25	5~25	5~25
	Functions	Smart Grid Ready		-	•	•	•
		PV Enabled		-	•	•	•
		2-Zone Control		-	•	•	•
Tank Integrated Hydro Unit	Power Supply			Φ, #, V, Hz	1Φ, 2, 220~240V, 50Hz	1Φ, 2, 220~240V, 50Hz	1Φ, 2, 220~240V, 50Hz
	Water Tank Volume			litres	200	200	200
	Declared Load Profile			L/XL	L	L	L
	Energy Efficiency Class			-	A	A	A
	Sound	Sound Pressure[4]	Heating/ Cooling Std	dB(A)	26	26	30
		Sound Power	Heating Std	dB(A)	40	40	44
	Dimensions	Net Weight		kg	130,0	130,0	130,0
		Net Dimensions (WxHxD)		mm	595x1800x700	595x1800x700	595x1800x700
Outdoor Unit	Power Supply			Φ, V, Hz	1Φ, 220~240V, 50Hz	1Φ, 220~240V, 50Hz	1Φ, 220~240V, 50Hz
	Compressor	Type		-	BLDC Twin Rotary	BLDC Twin Rotary	BLDC Twin Rotary
	Base Heater			-	-	•	•
	Sound	Sound Pressure[4]	Heating Std	dB(A)	45	48	50
			Cooling Std	dB(A)	45	48	50
		Sound Power	Heating Std	dB(A)	61	63	64
			Cooling Std	dB(A)	62	64	65
	Dimensions	Net Weight		kg	58,5	76,0	110,0
		Net Dimensions (WxHxD)		mm	880 x 798 x 310	940 x 998 x 330	940 x 1,420 x 330
	Refrigerant	Type		-	R32	R32	R32
					These products contain R32 (GWP=675) which is fluorinated greenhouse gas.		
		Factory Charging		tCO_2e	0,68	0,78	1,49
				kg	1,00	1,15	2,20
	Piping	Water Pipe (Space Heating)	Inlet/ Outlet	Φ, mm	28/28	28/28	28/28
		Water pipe (DHW)	Inlet/ Outlet	Φ, mm	22/22	22/22	22/22
	Operation	Ambient Temperature	Heating	°C	-25~35	-25~35	-25~35
			Cooling	°C	10~46	10~46	10~46
			DHW	°C	-25~43	-25~43	-25~43

Accessories






Touch Controller	Wi-Fi Kit	External Thermostat	Backup Heater (4/6kW)
MWR-WW10N	MIM-H04EN	MRW-TA	MHC-*00FE






AE200RNWMEG/EU AE160RXYDEG/EU MWR-WW10N	AE260RNWMGG/EU AE080RXYDGG/EU MWR-WW10N	AE260RNWMGG/EU AE120RXYDGG/EU MWR-WW10N	AE260RNWMGG/EU AE160RXYDGG/EU MWR-WW10N
16.000/15.000	8.000/7.100	12.000/11.300	16.000/15.000
14.000	7.500	12.000	14.000
3.620/5.180	1.770/2.530	2.650/3.730	3.620/5.180
3.280	1.900	2.770	3.280
4,42/2,90	4,52/2,81	4,53/3,03	4,42/2,90
4,27	3,95	4,33	4,27
4,48/3,53	4,44/3,23	4,69/3,51	4,48/3,53
A+++/A++	A+++/A++	A+++/A++	A+++/A++
32,00	10,00	10,00	12,00
40,00	16,10	16,10	16,10
12,00	7,00	12,00	12,00
58,00	48,00	58,00	58,00
15~65	15~65	15~65	15~65
5~25	5~25	5~25	5~25
•	•	•	•
•	•	•	•
•	•	•	•
1Φ,2,220~240,50Hz	3Φ,4,380~415,50Hz	3Φ,4,380~415,50Hz	3Φ,4,380~415,50Hz
200	260	260	260
L	XL	XL	XL
A	A	A	A
30	26	30	30
44	40	44	44
130,0	140,0	140,0	140,0
595x1800x700	595x1800x700	595x1800x700	595x1800x700
1Φ, 220~240V, 50Hz	3Φ, 380~415V, 50Hz	3Φ, 380~415V, 50Hz	3Φ, 380~415V, 50Hz
BLDC Twin Rotary	BLDC Twin Rotary	BLDC Twin Rotary	BLDC Twin Rotary
•	•	•	•
52	48	50	52
54	48	50	54
66	63	64	66
68	64	65	68
110,0	75,0	111,0	111,0
940 x 1,420 x 330	940 x 998 x 330	940 x 1,420 x 330	940 x 1,420 x 330
R32	R32	R32	R32
These products contain R32 (GWP=675) which is fluorinated greenhouse gas.			
1,49	0,78	1,49	1,49
2,20	1,15	2,20	2,20
28/28	28/28	28/28	28/28
22/22	22/22	22/22	22/22
-25~35	-25~35	-25~35	-25~35
10~46	10~46	10~46	10~46
-25~43	-25~43	-25~43	-25~43

EUROVENT CERTIFIED PERFORMANCE www.eurovent-certification.com

*A+++ energy label is available according to EU No 811/2013 label classification 2019, on a scale from D to A+++

[1] A2W Condition : (Heating) Water In/Out 30°C/35°C, Outdoor Air 7°C[DB]/6°C[WB]; (Cooling) Water In/ Out 23°C/18°C, Outdoor Air 35°C[DB].

[2] A2W Condition : (Heating) Water In/Out 47°C/55°C, Outdoor Air 7°C[DB]/6°C[WB].

[3] 65°C down to +10°C (max. 60°C down to -5°C)

[4] Sound pressure level is obtained in an anechoic room. Sound pressure level is a relative value, depending on the distance and acoustic environment. Sound pressure level may differ depending on operation conditions.

Specifications

Mono R32

- Intuitive, colour screen touch controller in multiple languages
- Energy monitoring through touch controller
- 2-zone control, suitable for floor heating and radiators
- SmartThings compatible with optional Wi-Fi Kit

Accessories



Touch Controller	Wi-Fi Kit	External Thermostat
MWR-WW10N	MIM-H04EN	MRW-TA









	Outdoor Unit Control Kit				AE050RXYDEG/EU MIM-E03CN	AE080RXYDEG/EU MIM-E03CN	AE120RXYDEG/EU MIM-E03CN	AE160RXYDEG/EU MIM-E03CN	AE080RXYDGG/EU MIM-E03CN	AE120RXYDGG/EU MIM-E03CN	AE160RXYDGG/EU MIM-E03CN
System	Operation	Nominal Capacity	Heating A7/W35[1]	W	5.000	8.000	12.000	16.000	8.000	12.000	16.000
			Cooling A35/W18[1]	W	5.000	7.500	12.000	14.000	7.500	12.000	14.000
		Power Input (Nominal)	Heating A7/W35[1]	W	1.030	1.770	2.650	3.620	1.770	2.650	3.620
			Cooling A35/W18[1]	W	1.140	1.900	2.770	3.280	1.900	2.770	3.280
		COP (Nominal Heating) A7/W35[1]		W/W	4,85	4,52	4,53	4,42	4,52	4,53	4,42
		EER (Nominal Cooling) A35/W18[1]		W/W	4,39	3,95	4,33	4,27	3,95	4,33	4,27
		Leaving Water Temperature[2]	Heating	℃	15~65	15~65	15~65	15~65	15~65	15~65	15~65
			Cooling	℃	5~25	5~25	5~25	5~25	5~25	5~25	5~25
		Ambient Temperature	Heating	℃	-25~35	-25~35	-25~35	-25~35	-25~35	-25~35	-25~35
			Cooling	℃	10~46	10~46	10~46	10~46	10~46	10~46	10~46
			DHW	℃	-25~43	-25~43	-25~43	-25~43	-25~43	-25~43	-25~43
	Functions	2-Zone Control[3]		-	●	●	●	●	●	●	●
Outdoor Unit	Power Supply			Φ, V, Hz	1Φ, 220~240V, 50Hz	1Φ, 220~240V, 50Hz	1Φ, 220~240V, 50Hz	1Φ, 220~240V, 50Hz	3Φ, 380~415V, 50Hz	3Φ, 380~415V, 50Hz	3Φ, 380~415V, 50Hz
	Compressor	Type		-	BLDC Twin Rotary	BLDC Twin Rotary	BLDC Twin Rotary	BLDC Twin Rotary	BLDC Twin Rotary	BLDC Twin Rotary	BLDC Twin Rotary
	Base Heater			-	-	●	●	●	-	●	●
	Sound	Sound Pressure[4]	Heating Std	dB(A)	45	48	50	52	48	50	52
			Cooling Std	dB(A)	45	48	50	54	48	50	54
		Sound Power	Heating Std	dB(A)	61	63	64	66	63	64	66
			Cooling Std	dB(A)	62	64	65	68	64	65	68
	Dimensions	Net Weight		kg	58,5	76,0	110,0	110,0	75,0	111,0	111,0
		Net Dimensions (WxHxD)		mm	880 x 798 x 310	940 x 998 x 330	940 x 1,420 x 330	940 x 1,420 x 330	940 x 998 x 330	940 x 1,420 x 330	940 x 1,420 x 330
	Refrigerant	Type		-	R32	R32	R32	R32	R32	R32	R32
					These products contain R32 (GWP=675) which is fluorinated greenhouse gas.			These products contain R32 (GWP=675) which is fluorinated greenhouse gas.			
		Factory Charging		tCO_2e	0,68	0,78	1,49	1,49	0,78	1,49	1,49
				kg	1,00	1,15	2,20	2,20	1,15	2,20	2,20

EUROVENT CERTIFIED PERFORMANCE www.eurovent-certification.com

[1] A2W Conditions : (Heating) Water In/Out 30℃/35℃, Outdoor Air ℃[DB]/6℃[WB]; (Cooling) Water In/Out 23℃/18℃, Outdoor Air 35℃[DB].

[2] 65℃ down to +10℃ (max. 60℃ down to -5℃)

[3] When combined with external thermostat.

[4] Sound pressure level is obtained in an anechoic room. Sound pressure level is a relative value, depending on the distance and acoustic environment. Sound pressure level may differ depending on operation conditions.

Specifications

Mono Control Kit

- Includes remote controller and flow sensor
- Mounting box with the control printed board assembly
- Leaving and return water sensors
- Domestic Hot Water sensor



Model			MIM-E03CN
Compatible With		-	EHS R32 Mono ODU
Power Supply		Ø, #, V, Hz	1, 2, 220-240, 50
External Control	Booster Heater	-	AC 230V (Max 20A)
	Back up Heater (/Boiler)	-	AC 230V (Max 10mA)
	Water Pump	-	AC 230V (Max 0.5A)
	2way(or 3way) Valve	-	AC 230V (Max 22mA)
	Room Thermostat	-	AC 230V (Max 22mA)
	Solar Pump	-	AC 230V (Max 10mA)
	Inverter Pump	-	AC 230V (Max 0.5A)
	3way Mixing Valve	-	AC 230V (Max 22mA)
External Dimension	Net Weight	kg	3.5 (TBD)
	Net Dimensions (WxHxD)	mm	290 x 110 x 370 (TBD)

Wi-Fi Kit

Model		MIM-H04EN
Fan	Compatible Controller	MWR-WW10N (R32)
	Max Connected IDU	16
	App	SmartThings
	Voice recognition	Bixby
	Welcome Cooling/Heating	Geofencing
	Automation	Customized control with a variety of execution rules
	Add scene	Easy control throughout customized user mode
	Energy monitoring	Individual power monitoring up to 16 outdoor units.
Product Size (mm) WxHXD		185 x 130 x 29

Project: Atico en el Retiro (Spain)
Project Architecture: ÁBATON
Interior Design: BATAVIA
Photography: Belén Imaz

Dimensional Drawings

Mono Tank Integrated Hydro Unit

AE200/260RNWG/EU**

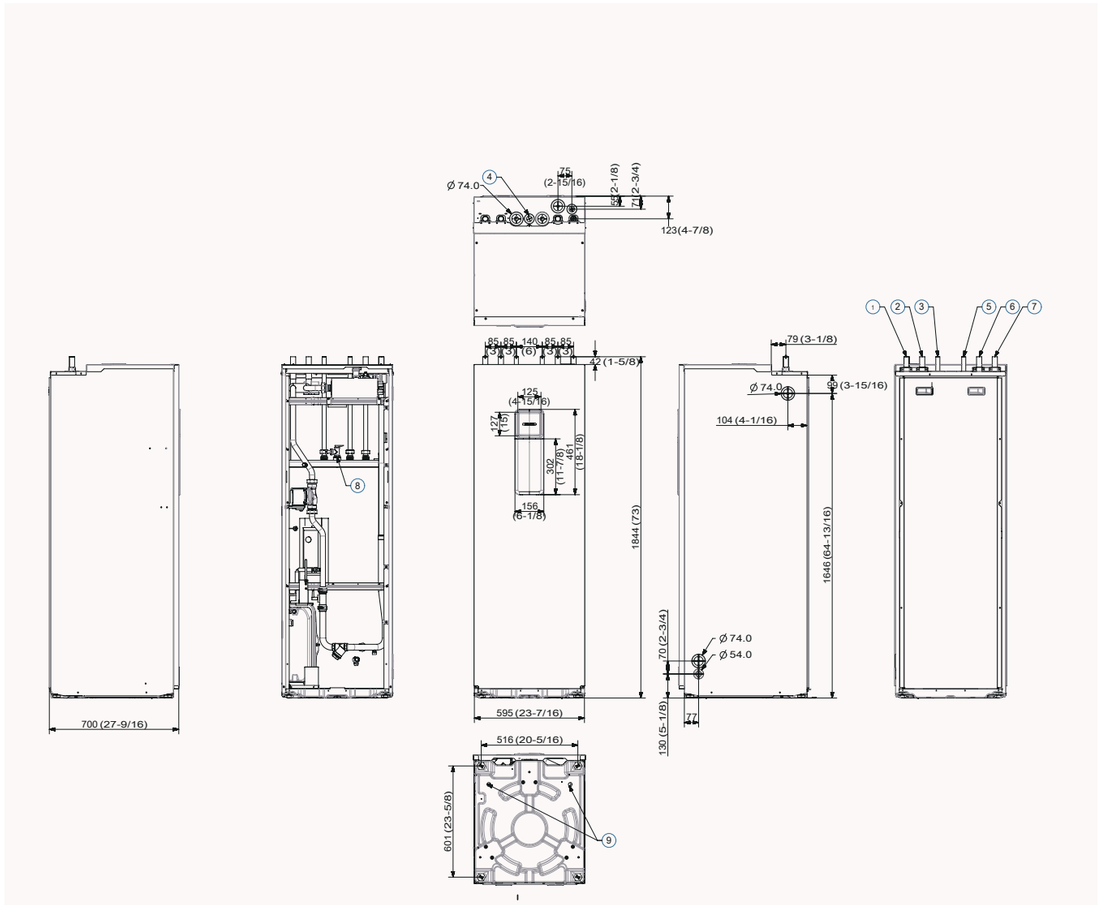

NO	Name	Description	
		AE200RNWSEG/EU	AE260RNWM*G/EU
1	Space heating Inlet	ø28	ø28
2	Space heating Outlet	ø28	ø28
3	DHW Inlet	ø22	ø22
4	Secondary water return	N/A	ø22
5	DHW Outlet	ø22	ø22
6	Heat Pump In	ø28	ø28
7	Heat Pump Out	ø28	ø28
8	T/P v/v	Female PT1/2"	Female PT1/2"
9	Drain Holes	(Option) Connect with the provided drain plug	

Mono Outdoor

AE050RXYDEG/EU

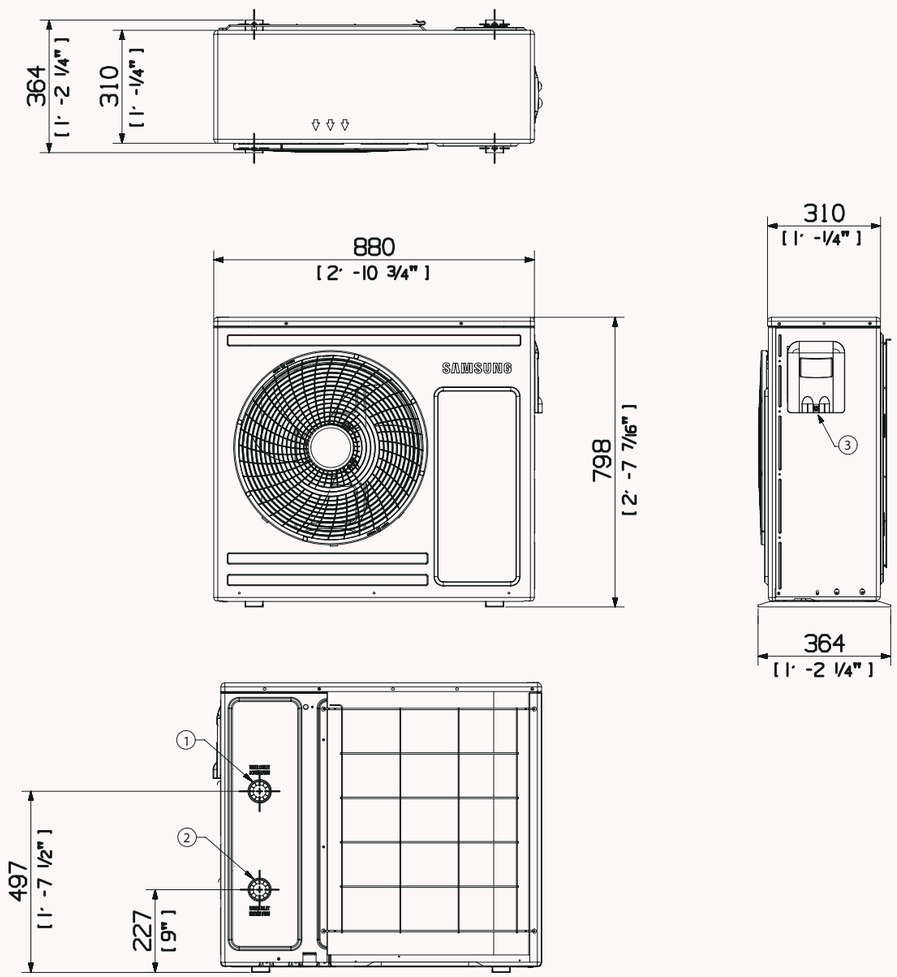

NO	Name
1	Water Pipe(Out)
2	Water Pipe(In)
3	Power & Communication Wiring Conduit Holes

Dimensional Drawings

Mono Outdoor

AE080RXYD*G/EU

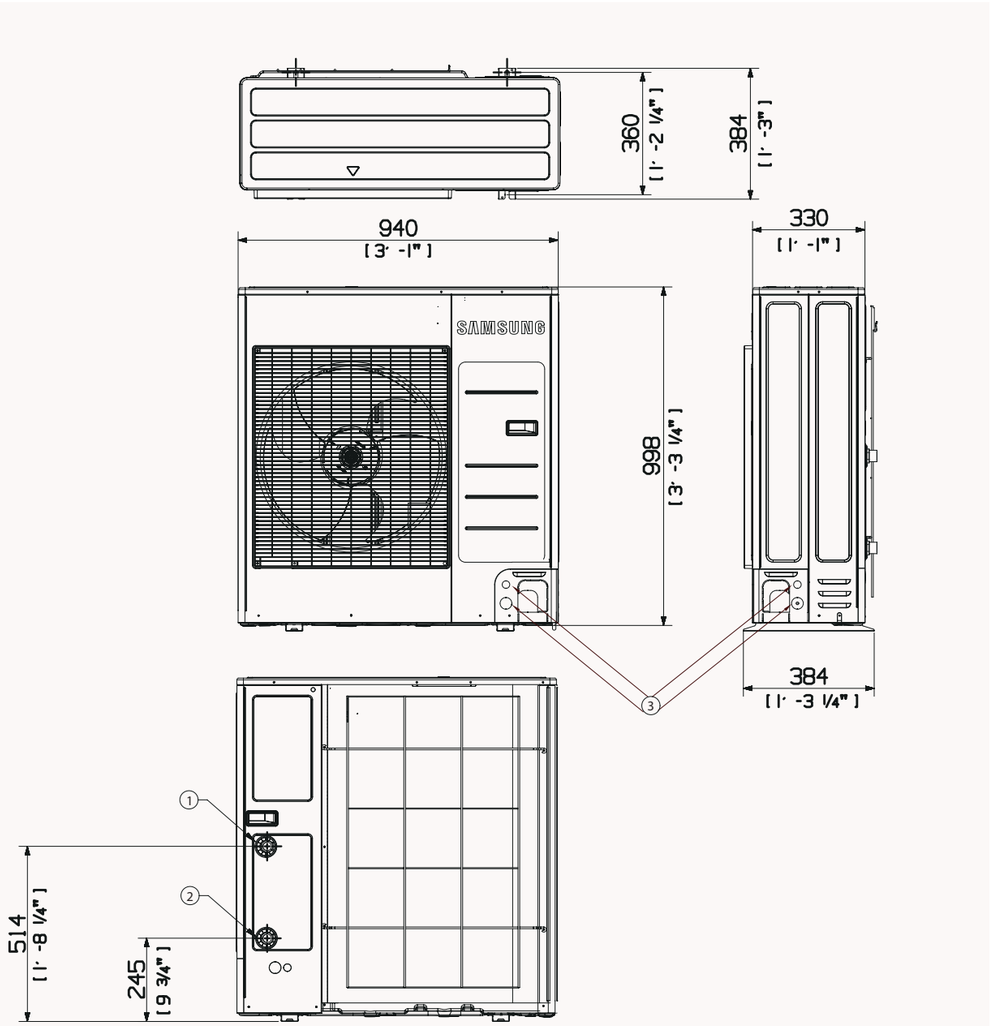

NO	Name
1	Water Pipe(Out)
2	Water Pipe(In)
3	Power & Communication Wiring Conduit Holes

Mono Outdoor

AE120/160RXYD*G/EU

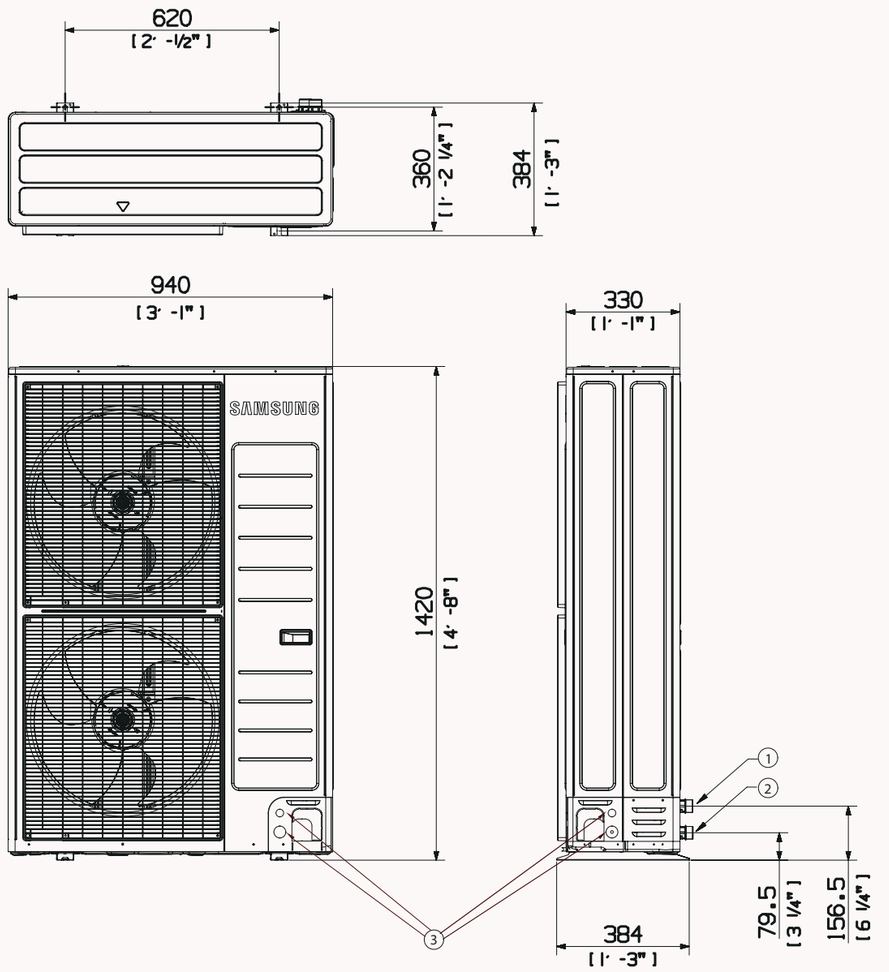

NO	Name
1	Water Pipe(Out)
2	Water Pipe(In)
3	Power & Communication Wiring Conduit Holes

Dimensional Drawings

Mono Control Kit

MIM-E03CN

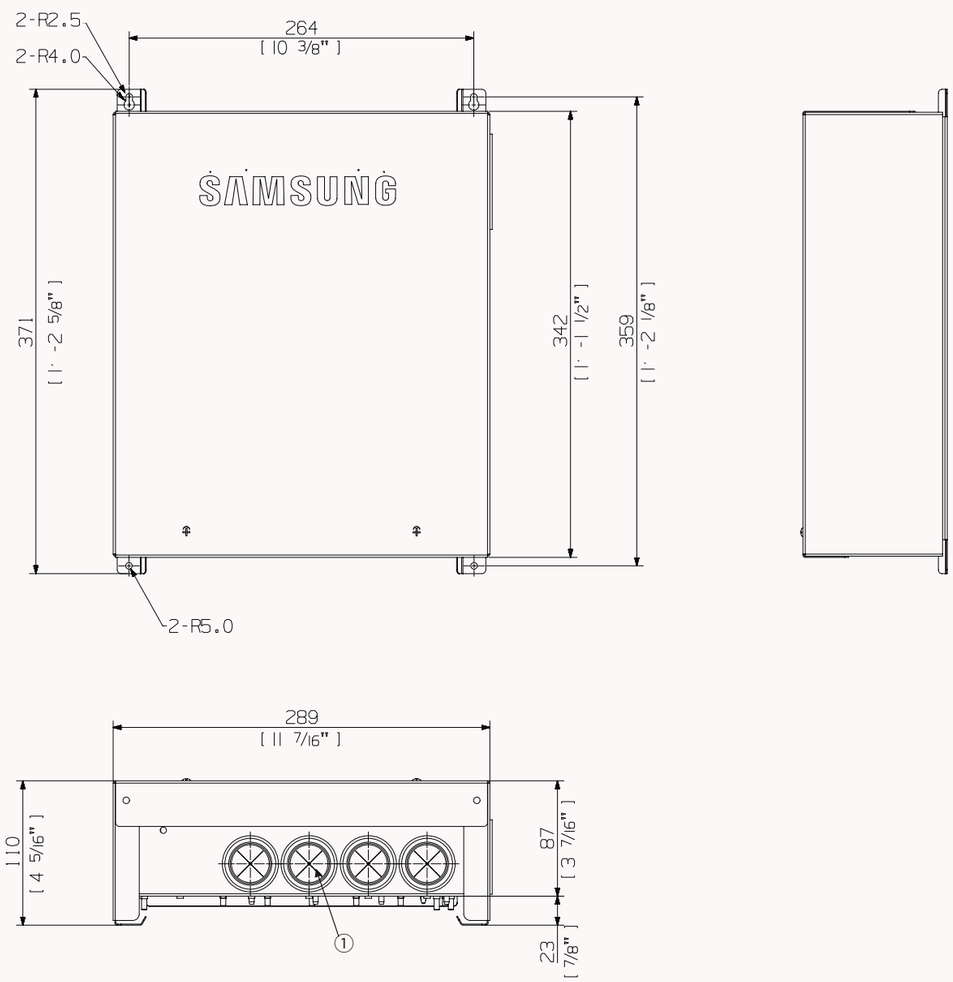

NO	Name
1	Conduit Holes for Wiring (Rubber)

Mono

Project: Casa L (Spain)
Project Architecture: ÁBATON
Interior Design: BATAVIA
Photography: Carlos Muntadas

Split



Project: Casa L (Spain)
Project Architecture: ÁBATON
Interior Design: BATAVIA
Photography: Carlos Muntadas

Specifications

ClimateHub Split R32 A+++

- Integrated solution for heating and domestic hot water
- 4-step quiet operation mode (down to 35dB(A))*
- Compact unit size with large water tank (200L & 260L)
- Intuitive, colour screen touch controller in multiple languages
- Energy monitoring through touch controller
- Smooth servicing through the front-mounted service window
- PV and Smart Grid ready
- 2-zone control, suitable for floor heating and radiators
- SCOP rating of A+++**
- SmartThings compatible with optional Wi-Fi Kit
- Backup heater is included to ensure continuous heating






	Indoor Unit Outdoor Unit Controller			AE200RNWSEG/EU AE040RXEDEG/EU MWR-WW10N	AE200RNWSEG/EU AE060RXEDEG/EU MWR-WW10N	AE200RNWSEG/EU AE090RXEDEG/EU MWR-WW10N
System	Operation	Nominal Capacity	Heating A7/W35[1] / A7/W55[2] W	4.400/3.900	6.000/5.200	9.000/8.000
			Cooling A35/W18[1] W	5.000	6.500	8.700
		Power Input (Nominal)	Heating A7/W35[1] / A7/W55[2] W	846/1.320	1.220/1.810	1.870/2.730
			Cooling A35/W18[1] W	1.090	1.470	2.110
		COP (Nominal Heating) A7/W35[1] / A7/W55[2]	W/W	5,20/2,95	4,92/2,87	4,81/2,93
		EER (Nominal Cooling) A35/W18[1]	W/W	4,59	4,42	4,12
		SCOP LWT 35°C/ 55°C	W/W	4,58/3,25	4,58/3,31	4,45/3,24
		Average Seasonal Space Heating Eff. Class ** LWT 35°C/ 55°C	-	A+++/A++	A+++/A++	A+++/A++
		Current MCA	A	16,00	16,00	22,00
			MFA A	20,00	20,00	27,50
		Leaving Water Temperature[3]	Heating °C	15~65	15~65	15~65
			Cooling °C	5~25	5~26	5~27
	Functions	Smart Grid Ready / PV Enabled	-	●	●	●
		4-Step Quiet Mode	-	●	●	●
		2-Zone Control	-	●	●	●
Tank Integrated Hydro Unit	Power Supply		Φ, #, V, Hz	1Φ, 2, 220~240V, 50Hz	1Φ, 2, 220~240V, 50Hz	1Φ, 2, 220~240V, 50Hz
	Water Tank Volume		litres	200	200	200
	Declared Load Profile		L/XL	L	L	L
	Energy Efficiency Class		-	A+	A+	A+
	Sound	Sound Pressure[4]	Heating/ Cooling Std dB(A)	26	26	26
		Sound Power	Heating Std dB(A)	40	40	40
	Dimensions	Net Weight	kg	136	136	136
		Net Dimensions (WxHxD)	mm	595x1800x700	595x1800x700	595x1800x700
Outdoor Unit	Power Supply		Φ, V, Hz	1Φ, 220~240V, 50Hz	1Φ, 220~240V, 50Hz	1Φ, 220~240V, 50Hz
	Compressor	Type	-	BLDC Twin Rotary	BLDC Twin Rotary	BLDC Twin Rotary
	Base Heater		-	-	-	●
	Sound	Sound Pressure[4]	Heating Std dB(A)	44	47	49
			Cooling Std dB(A)	46	47	49
			Night Mode @ 3m dB(A)	≤ 35	35	35
		Sound Power	Heating Std dB(A)	58	60	64
			Cooling Std dB(A)	61	62	63
	Dimensions	Net Weight	kg	46,5	46,5	73,0
		Net Dimensions (WxHxD)	mm	880 x 638 x 310	880 x 638 x 310	940 x 998 x 330
	Refrigerant	Type	-	R32	R32	R32
				These products contain R32 (GWP=675) which is fluorinated greenhouse gas.		
		Factory Charging	tCO_2e	0,81	0,81	0,95
			kg	1,2	1,2	1,4
	Piping	Piping Connections	Liquid Pipe Φ, mm (inch)	6.35 (1/4")	6.35 (1/4")	6.35 (1/4")
			Gas Pipe Φ, mm (inch)	15.88 (5/8")	15.88 (5/8")	15.88 (5/8")
		Piping length (ODU-IDU)	Max.[Equiv.] m	30,00	30,00	35,00
		Level difference (IDU-IDU)	Max. m	20,00	20,00	20,00
		Water pipe (Space Heating)	Inlet/Outlet Φ, mm	28/28	28/28	28/28
		Water pipe (DHW)	Inlet/Outlet Φ, mm	22/22	22/22	22/22
	Operation	Ambient Temperature	Heating °C	-25~35	-25~35	-25~35
			Cooling °C	10~46	10~46	10~46
			DHW °C	-25~43	-25~43	-25~43

Accessories






Touch Controller	Wi-Fi Kit	External Thermostat	Backup Heater (4/6kW)
MWR-WW10N	MIM-H04EN	MRW-TA	MHC-*00FE






AE260RNWSEG/EU AE040RXEDEG/EU MWR-WW10N	AE260RNWSEG/EU AE060RXEDEG/EU MWR-WW10N	AE260RNWSEG/EU AE090RXEDEG/EU MWR-WW10N	AE260RNWSGG/EU AE090RXEDGG/EU MWR-WW10N
4.400/3.900	6.000/5.200	9.000/8.000	9.000/8.000
5.000	6.500	8.700	8.700
846/1.320	1.220/1.810	1.870/2.730	1.870/2.730
1.090	1.470	2.110	2.110
5,20/2,95	4,92/2,87	4,81/2,93	4,81/2,93
4,59	4,42	4,12	4,12
4,58/3,25	4,58/3,31	4,45/3,24	4,45/3,24
A+++/A++	A+++/A++	A+++/A++	A+++/A++
16,00	16,00	22,00	10,00
20,00	20,00	27,50	16,10
15~65	15~65	15~65	15~65
5~28	5~29	5~30	5~31
●	●	●	●
●	●	●	●
●	●	●	●
1Φ, 2, 220~240V, 50Hz	1Φ, 2, 220~240V, 50Hz	1Φ, 2, 220~240V, 50Hz	3Φ, 4, 380~415V, 50Hz
260	260	260	260
XL	XL	XL	XL
A+	A+	A+	A+
26	26	26	26
40	40	40	40
146,0	146,0	146,0	146,0
595x1800x700	595x1800x700	595x1800x700	595x1800x700
1Φ, 220~240V, 50Hz	1Φ, 220~240V, 50Hz	1Φ, 220~240V, 50Hz	3Φ, 380~415V, 50Hz
BLDC Twin Rotary	BLDC Twin Rotary	BLDC Twin Rotary	BLDC Twin Rotary
-	-	●	●
44	47	49	49
46	47	49	49
-	35	35	35
58	60	64	64
61	62	63	63
46,5	46,5	73,0	72,0
880 x 638 x 310	880 x 638 x 310	940 x 998 x 330	940 x 998 x 330
R32	R32	R32	R32
These products contain R32 (GWP=675) which is fluorinated greenhouse gas.			
0,81	0,81	0,95	0,95
1,2	1,2	1,4	1,4
6.35 (1/4")	6.35 (1/4")	6.35 (1/4")	6.35 (1/4")
15.88 (5/8")	15.88 (5/8")	15.88 (5/8")	15.88 (5/8")
30,00	30,00	35,00	35,00
20,00	20,00	20,00	20,00
28/28	28/28	28/28	28/28
22/22	22/22	22/22	22/22
-25~35	-25~35	-25~35	-25~35
10~46	10~46	10~46	10~46
-25~43	-25~43	-25~43	-25~43

EUROVENT CERTIFIED PERFORMANCE www.eurovent-certification.com

* 35dB(A) is only applicable for 6kW and 9kW outdoor units down to +4°C stated in 3 m distance in an anechoic environment.

** A+++ energy label is available according to EU No 811/2013 label classification 2019, on a scale from D to A+++

[1] A2W Condition : (Heating) Water In/Out 30°C/35°C, Outdoor Air 7°C[DB]/6°C[WB]; (Cooling) Water In/Out 23°C/18°C, Outdoor Air 35°C[DB].

[2] A2W Condition : (Heating) Water In/Out 47°C/55°C, Outdoor Air 7°C[DB]/6°C[WB].

[3] 65°C down to +10°C (max. 60°C down to -5°C)

[4] Sound pressure level is obtained in an anechoic room. Sound pressure level is a relative value, depending on the distance and acoustic environment. Sound pressure level may differ depending on operation conditions.

Split

Specifications

Split with Third Party DHW Tank R32

- Connectable with R32 Split ODU in combination of third party Tank
- Competible with thermostats, solar panels and back-up boilers
- Intuitive, colour screen touch controller in multiple languages
- Energy monitoring through touch controller
- PV and Smart Grid ready
- 2-zone control, suitable for floor heating and radiators
- SmartThings compatible with optional Wi-Fi kit

Accessories



EHS Controller
MWR-WW10N

Wi-Fi Kit
MIM-H04EN



External Thermostat
MRW-TA











	Indoor Unit Outdoor Unit				AE090RNYDEG/EU AE040RXEDEG/EU	AE090RNYDEG/EU AE060RXEDEG/EU	AE090RNYDEG/EU AE090RXEDEG/EU	AE090RNYDGG/EU AE090RXEDGG/EU
System	Operation	Nominal Capacity	Heating A7/W35[1]	W	4.400	6.000	9.000	9.000
			Cooling A35/W18[1]	W	5.000	6.500	8.700	8.700
		Power Input (Nominal)	Heating A7/W35[1]	W	846	1.220	1.870	1.870
			Cooling A35/W18[1]	W	1.090	1.470	2.110	2.110
		COP (Nominal Heating) A7/W35[1]		W/W	5,20	4,92	4,81	4,81
		EER (Nominal Cooling) A35/W18[1]		W/W	4,59	4,42	4,12	4,12
		Seasonal Space Heating Eff. Class LWT 35°C/ 55°C		-	A+++/A++	A+++/A++	A+++/A++	A+++/A++
		Current	MCA	A	16,00	16,00	22,00	10,00
			MFA	A	20,00	20,00	27,50	16,10
		Leaving Water Temperature	Heating	°C	15~65	15~65	15~65	15~65
			Cooling	°C	5~25	5~25	5~25	5~25
		Ambient Temperature	Heating	°C	-25~35	-25~35	-25~35	-25~35
			Cooling	°C	10~46	10~46	10~46	10~46
			DHW	°C	-25~43	-25~43	-25~43	-25~43
	Functions	Smart Grid Ready		-	•	•	•	•
		PV Enabled		-	•	•	•	•
		2-Zone Control		-	•	•	•	•
Wall-Mounted Hydro Unit	Power Supply			Φ, V, Hz	1Φ, 2, 220~240V, 50Hz	1Φ, 2, 220~240V, 50Hz	1Φ, 2, 220~240V, 50Hz	3Φ, 2, 380~415V, 50Hz
	Sound	Sound Pressure[2]		dB(A)	26	26	26	26
		Sound Power		dB(A)	40	40	40	40
	Dimensions	Net Weight		kg	45,0	45,0	45,0	46.5
		Net Dimensions (WxHxD)		mm	510 x 850 x 315	510 x 850 x 315	510 x 850 x 315	510 x 850 x 315
	Piping	Liquid Pipe		Φ, mm (inch)	6.35 (1/4")	6.35 (1/4")	6.35 (1/4")	6.35 (1/4")
		Gas Pipe		Φ, mm (inch)	15.88 (5/8")	15.88 (5/8")	15.88 (5/8")	15.88 (5/8")
Outdoor unit	Compressor	Type		-	BLDC Twin Rotary	BLDC Twin Rotary	BLDC Twin Rotary	BLDC Twin Rotary
	Base Heater			-	•	•	•	•
	Sound	Sound Pressure[2]		dB(A)	46	47	49	49
		Sound Power		dB(A)	61	62	63	63
	Dimensions	Net Weight		kg	46.5	46.5	73,0	72,0
		Net Dimensions (WxHxD)		mm	880 x 638 x 310	880 x 638 x 310	940 x 998 x 330	940 x 998 x 330
	Refrigerant	Type		-	R32	R32	R32	R32
					These products contain R32 (GWP=675) which is fluorinated greenhouse gas.			These products contain R410A (GWP=2.088) which is fluorinated greenhouse gas.
		Factory Charging		tCO_2e	1.2	1.2	1.4	1.4
				kg	0.81	0.81	0.95	0.95
	Piping	Piping Connections	Liquid Pipe	Φ, mm (inch)	6.35 (1/4")	6.35 (1/4")	6.35 (1/4")	6.35 (1/4")
			Gas Pipe	Φ, mm (inch)	15.88 (5/8")	15.88 (5/8")	15.88 (5/8")	15.88 (5/8")
		Piping length (ODU-IDU)	Max.[Equiv.]	m	30	30	35	35
		Level difference (IDU-IDU)	Max.	m	20	20	20	20
		Chargeless Length		Φ, mm	15	15	15	15
		Water pipe	Inlet/Outlet	Φ, mm	1+1/4"	1+1/4"	1+1/4"	1+1/4"

EUROVENT CERTIFIED PERFORMANCE
www.eurovent-certification.com

[1] A2W Conditions : (Heating) Water In/Out 30°C/35°C, Outdoor Air 7°C[DB]/6°C[WB]; (Cooling) Water In/Out 23°C/18°C, Outdoor Air 35°C[DB].

[2] 65°C down to +10°C (max. 60°C down to -5°C).

[3] Sound pressure level is obtained in an anechoic room. Sound pressure level is a relative value, depending on the distance and acoustic environment. Sound pressure level may differ depending on operation conditions.

**A+++ energy label is available according to EU No 811/2013 label classification 2019, on a scale from D to A+++

Specifications

Split (R410A)

- SmartThings compatible with optional Wi-Fi Kit
- Connectable with R410A Split ODU in combination of 3rd party Tank
- Compatible with room thermostats, solar-powered pumps,2 or 3-way valves and back-up boilers







	Indoor Unit Outdoor Unit				AE160JNYDEH/EU AE120JXEDEH/EU	AE160JNYDGH/EU AE120JXEDGH/EU	AE160JNYDEH/EU AE160JXEDEH/EU	AE160JNYDGH/EU AE160JXEDGH/EU
System	Operation	Nominal Capacity	Heating A7/W35[1]	W	12.000	12.000	16.000	16.000
			Cooling A35/W18[1]	W	12.000	12.000	15.000	15.000
		Power Input (Nominal)	Heating A7/W35[1]	W	2.590	2.590	3.760	3.760
			Cooling A35/W18[1]	W	3.100	3.100	4.140	4.140
		COP (Nominal Heating) A7/W35[1]		W/W	4,63	4,63	4,26	4,26
		EER (Nominal Cooling) A35/W18[1]		W/W	3,87	3,87	3,62	3,62
		Seasonal Space Heating Eff. Class LWT 35°C/ 55°C		-	A++/ A+	A++/ A+	A++/ A+	A++/ A+
		Current	MCA	A	28,00	10,00	32,00	12,00
			MFA	A	35,00	16,10	37,50	16,10
		Leaving Water Temperature	Heating	℃	25~55	25~55	25~55	25~55
			Cooling	℃	5~25	5~25	5~25	5~25
		Ambient Temperature	Heating	℃	-25~35	-25~35	-25~35	-25~35
			Cooling	℃	10~46	10~46	10~46	10~46
			DHW	℃	-25~43	-25~43	-25~43	-25~43
Wall-Mounted Hydro Unit	Power Supply			Φ, V, Hz	1Φ, 2, 220~240V, 50Hz	3Φ, 2, 380~415V, 50Hz	1Φ, 2, 220~240V, 50Hz	3Φ, 2, 380~415V, 50Hz
	Sound	Sound Pressure[2]		dB(A)	50 / 50	50 / 50	54 / 52	54 / 52
		Sound Power		dB(A)	64 / 64	64 / 64	69 / 66	69 / 66
	Dimensions	Net Weight		kg	45,0	46,5	45,0	46,5
		Net Dimensions (WxHxD)		mm	510 x 850 x 315	510 x 850 x 315	510 x 850 x 315	510 x 850 x 315
	Piping	Liquid Pipe		Φ, mm (inch)	9.52 (3/8")	9.52 (3/8")	9.52 (3/8")	9.52 (3/8")
		Gas Pipe		Φ, mm (inch)	15.88 (5/8")	15.88 (5/8")	15.88 (5/8")	15.88 (5/8")
Outdoor unit	Compressor	Type		-	BLDC Twin Rotary	BLDC Twin Rotary	BLDC Twin Rotary	BLDC Twin Rotary
	Base Heater			-	•	•	•	•
	Sound	Sound Pressure[2]		dB(A)	50	50	52	52
		Sound Power		dB(A)	64	64	66	66
	Dimensions	Net Weight		kg	100,0	101,5	100,0	101,5
		Net Dimensions (WxHxD)		mm	940 x 1420 x 330	940 x 1420 x 330	940 x 1420 x 330	940 x 1420 x 330
	Refrigerant	Type		-	R410A	R410A	R410A	R410A
					These products contain R410A (GWP=2.088) which is fluorinated greenhouse gas.			These products contain R410A (GWP=2.088) which is fluorinated greenhouse gas.
		Factory Charging		tCO_2e	6.22	6.22	6.22	6.22
				kg	2.98	2.98	2.98	2.98
	Piping	Piping Connections	Liquid Pipe	Φ, mm (inch)	9.52 (3/8")	9.52 (3/8")	9.52 (3/8")	9.52 (3/8")
			Gas Pipe	Φ, mm (inch)	15.88 (5/8")	15.88 (5/8")	15.88 (5/8")	15.88 (5/8")
		Piping length (ODU-IDU)	Max.[Equiv.]	m	50	50	50	50
		Level difference (IDU-IDU)	Max.	m	30	30	30	30
		Chargeless Length		Φ, mm	15	15	15	15
		Water pipe	Inlet/Outlet	Φ, mm	1+1/4"	1+1/4"	1+1/4"	1+1/4"

Accessories





EHS Controller	Wi-Fi Kit	External Thermostat
MWR-WW00N	MIM-H03N	MRW-TA

[1] A2W Conditions : (Heating) Water In/Out 30°C/35°C, Outdoor Air 7°C[DB]/6°C[WB]; (Cooling) Water In/Out 23°C/18°C, Outdoor Air 35°C[DB].

[2] Sound pressure level is obtained in an anechoic room. Sound pressure level is a relative value, depending on the distance and acoustic environment. Sound pressure level may differ depending on operation conditions.

Specifications

Wi-Fi Kit



Model		MIM-H03N	MIM-H04EN
Fan	Compatible Controller	MWR-WW00N (R410A)	MWR-WW10N (R32)
	Max Connected IDU	16	16
	App	SmartThings	SmartThings
	Voice recognition	-	Bixby
	Welcome Cooling/Heating	-	Geofencing
	Automation	-	Customized control with a variety of execution rules
	Add scene	-	Easy control throughout customized user mode
	Energy monitoring	One outdoor power monitoring (Module can not be monitored)	Individual power monitoring up to 16 outdoor units.
Product Size (mm) WxHXD		120 x 124 x 29	185 x 130 x 29

Project: Casa L (Spain)
Project Architecture: ÁBATON
Interior Design: BATAVIA
Photography: Carlos Muntadas

Dimensional Drawings

Split Tank Integrated Hydro Unit

AE200/260RNW**G/EU

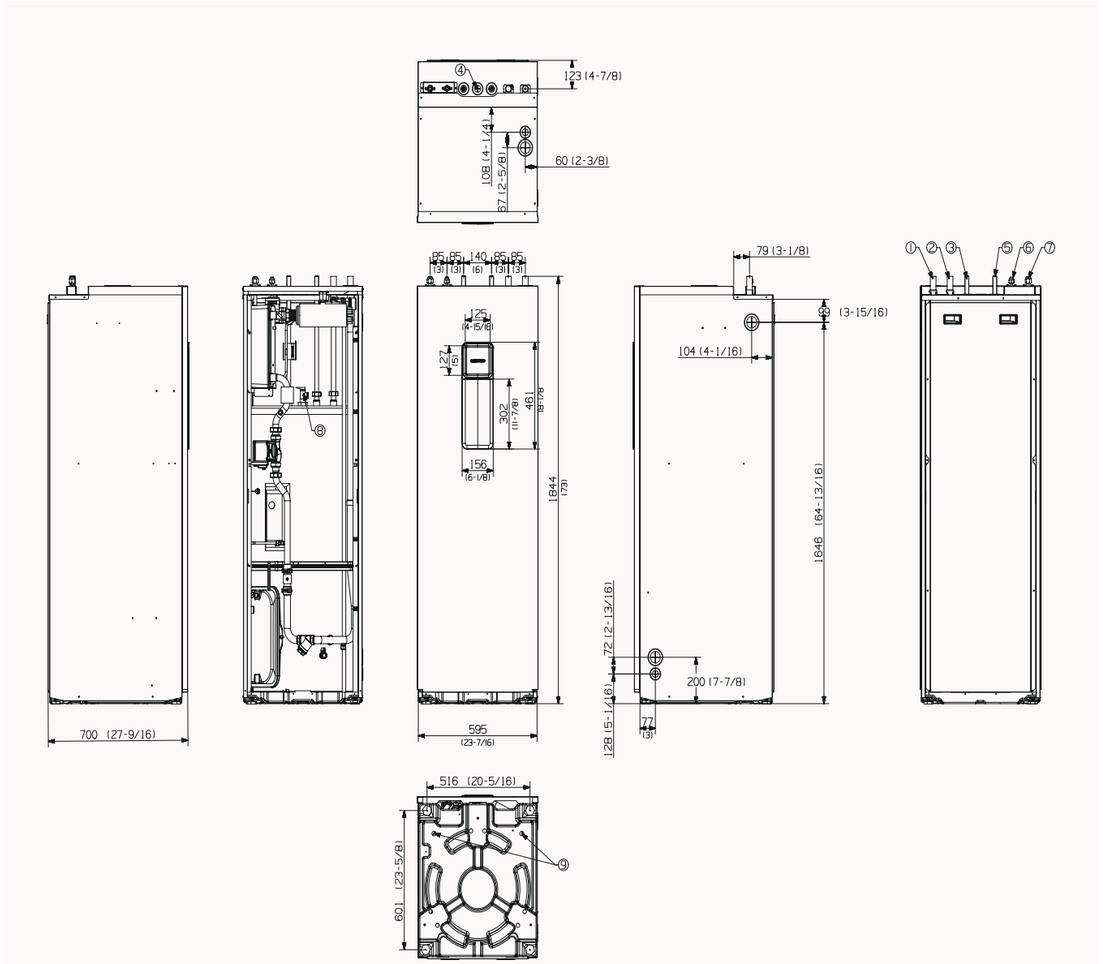

NO	Name	Description	
		AE200RNWSEG/EU	AE260RNWS*G/EU
1	Space heating Inlet	Ø28	Ø28
2	Space heating Outlet	Ø28	Ø28
3	DHW Inlet	Ø22	Ø22
4	Secondary water return	N/A	Ø22
5	DHW Outlet	Ø22	Ø22
6	Refrigerant liquid pipe	Ø9.52	Ø9.52
7	Refrigerant Gas pipe	Ø15.88	Ø15.88
8	T/P v/v	Female PT1/2"	Female PT1/2"
9	Drain Holes	(Option) Connect with the provided drain plug	

Split Outdoor

AE040/060RXEDEG/EU

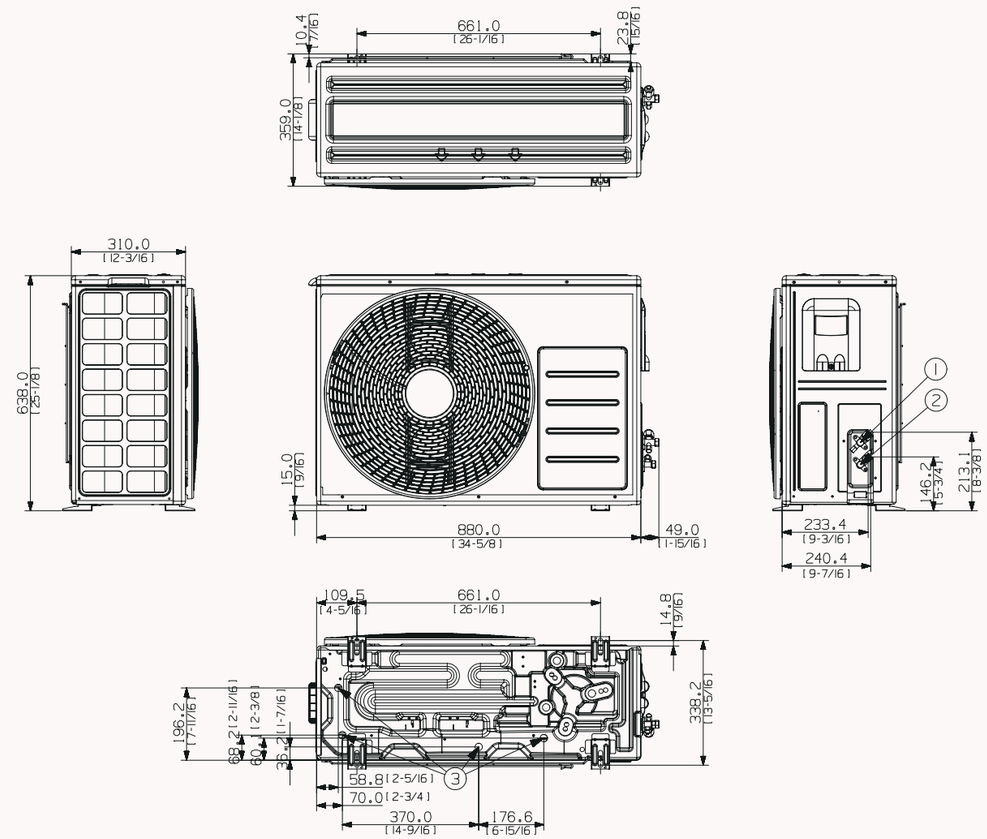

NO	Name	Description	
1	Refrigerant liquid pipe	Φ6.35(1/4)	Ø28
2	Refrigerant gas pipe	Φ15.88(5/8)	Ø28
3	Drain holes	Connect with the provided drain plug.	Ø22

Dimensional Drawings

Split Outdoor

AE090RXED*G/EU

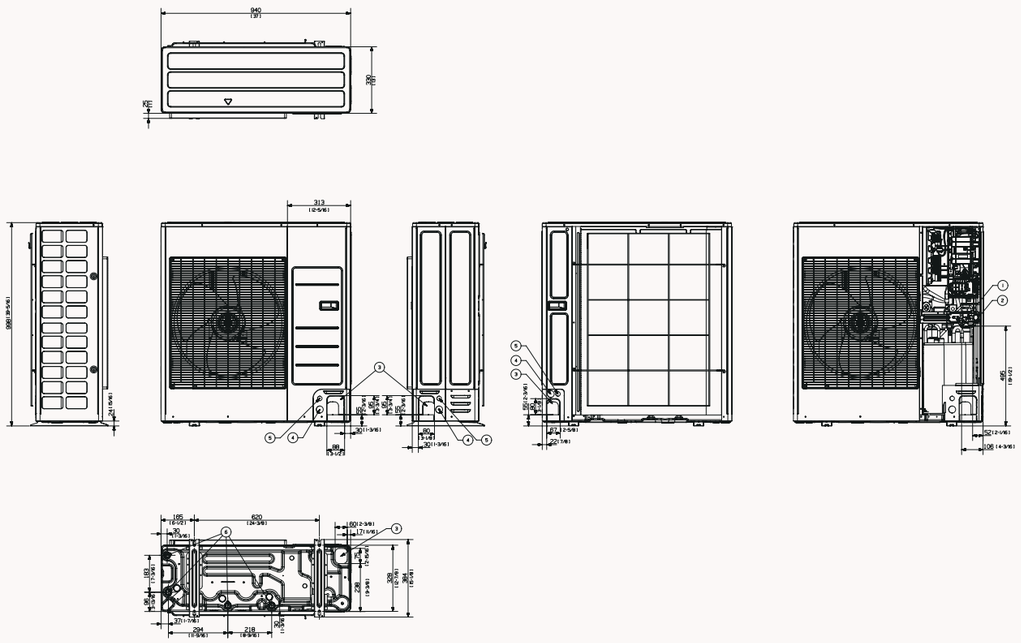

NO	Name	Description
1	Gas Ref. Pipe	Φ6.35(1/4)
2	Liquid Ref. Pipe	Φ15.88(5/8)
3	Piping intake knockout hole	Front / Side / Rear / Bottom
4	Power wiring conduit	Front / Side / Rear , Φ34 [1-3/8]
5	Communication wiring conduit	Front / Side / Rear , Φ22 [7/8]
6	Drain Hole	Connect with the provided drain plug

Split Outdoor

AE120/160JXYD*H/EU

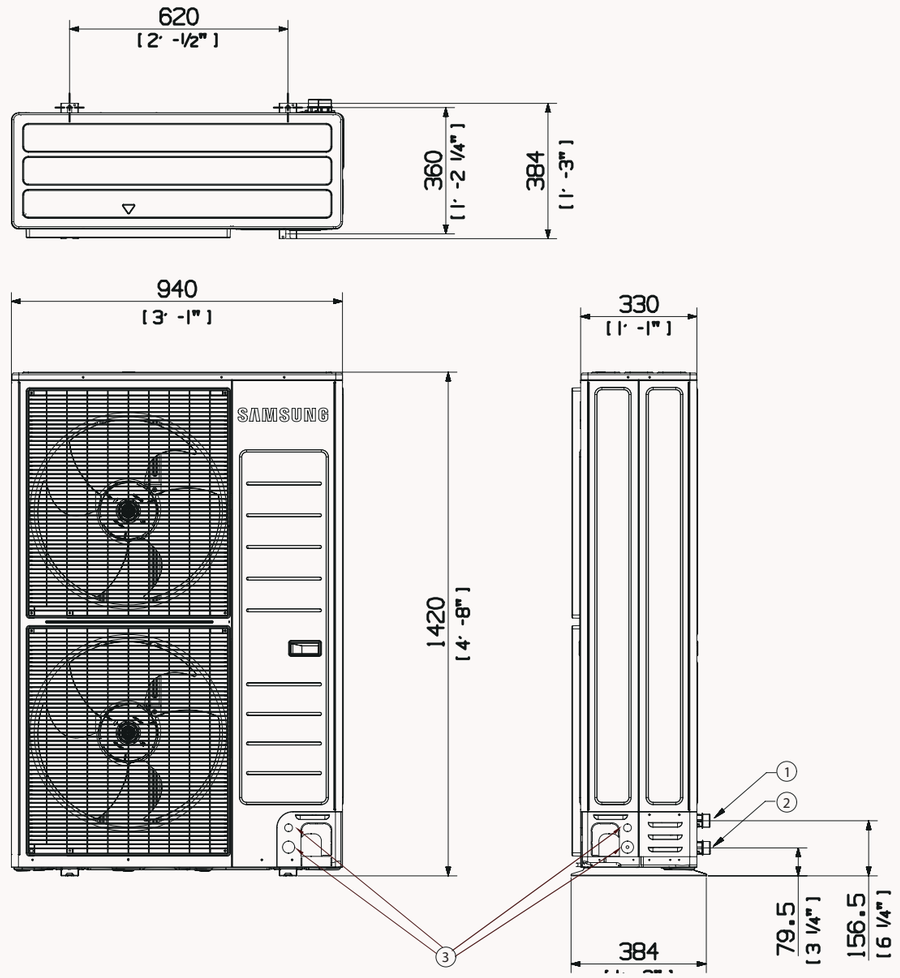

NO	Name
1	Gas Ref. Pipe
2	Liquid Ref. Pipe
3	Drain Hole
4	Power wiring conduit

Dimensional Drawings

Split Wall-Mounted Hydro Unit

AE09RNYD*G/AE160JNYD*H

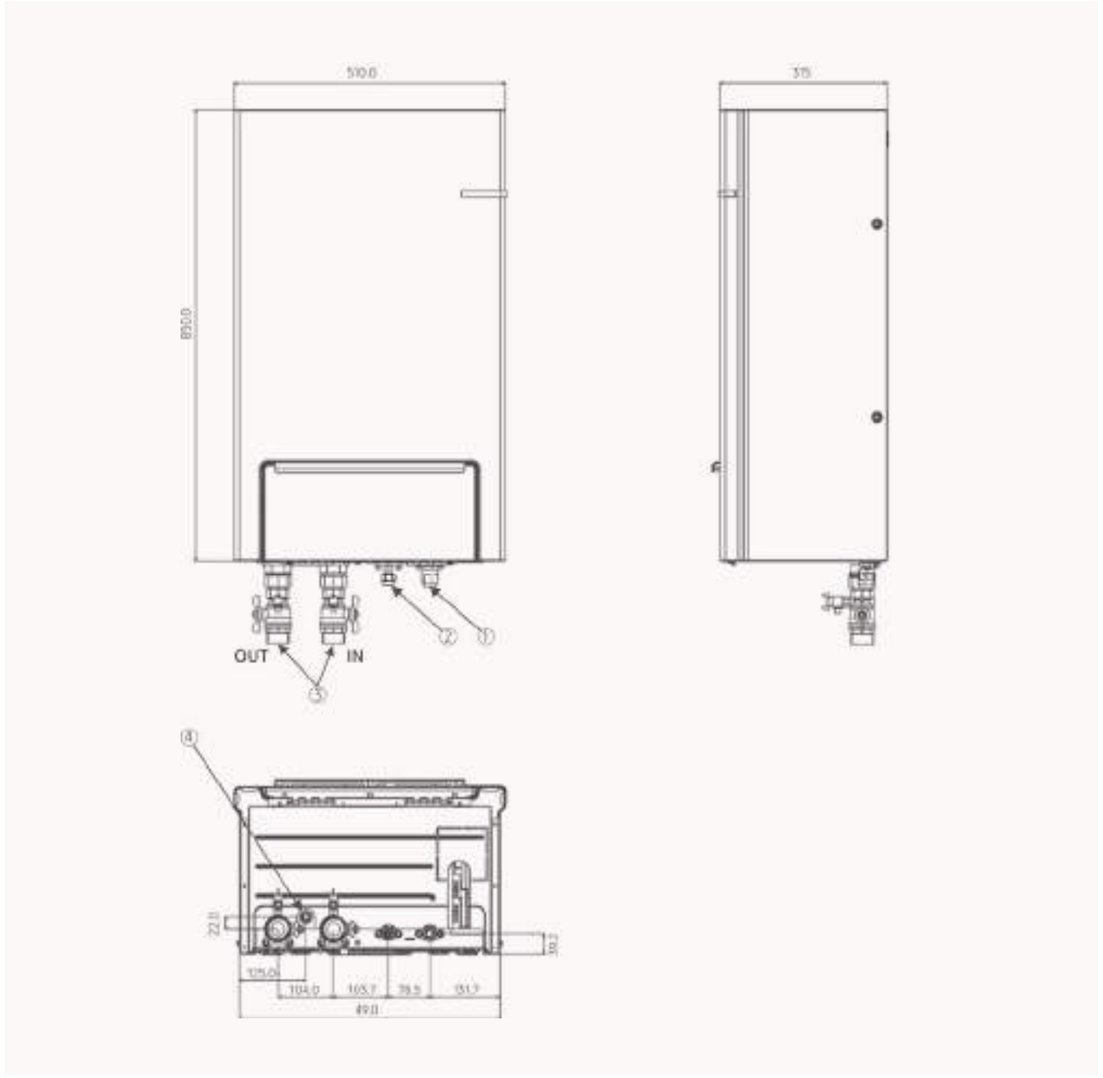

NO	Name
1	Gas Ref. Pipe
2	Liquid Ref. Pipe
3	Water Pipe (Inlet/Outlet)
4	Drain Hose Connector

Project: Atico en el Retiro (Spain)
Project Architecture: ÁBATON
Interior Design: BATAVIA
Photography: Belén Imaz

TDM Plus

Specifications

TDM Plus (R410A)

- All-in-One Air-to-Water (A2W) and Air-to Air (A2A) solution
- 2-zone control, suitable for floor heating and radiators
- SmartThings compatible with optional Wi-Fi Kit
- Connect up to 7 indoor air conditioning units






	Indoor Unit Outdoor Unit				AE090MNYDEH/EU AE044MXTPEH/EU	AE090MNYDEH/EU AE066MXTPEH/EU	AE090MNYDEH/EU AE090MXTPEH/EU
System	Operation	Nominal Capacity	Heating A7/W35[1]	W	4.400	6.600	9.000
			Cooling A35/W18[1]	W	5.100	6.700	8.000
		Power Input (Nominal)	Heating A7/W35[1]	W	930	1.470	2.120
			Cooling A35/W18[1]	W	1.030	1.480	1.850
		COP (Nominal Heating) A7/W35[1]		W/W	4,73	4,49	4,25
		EER (Nominal Cooling) A35/W18[1]		W/W	4,95	4,53	4,32
		SCOP LWT 35°C		W/W	4,42	4,42	4,42
		Seasonal Space Heating Eff. Class LWT 35°C/ 55°C			A++/A	A++/A	A++/A
		Current	MCA	A	18,00	20,00	22,00
			MFA	A	25,00	25,00	27,50
		Maximum Allowable IDU Connections (Hydro A2W Unit Not Included)	Max. Number of IDU	EA	2	3	4
			Total Capacity Min. (Cooling)	kW	2,20	3,30	4,50
			Total Capacity Min. (Cooling)	kW	4,40	6,60	9,00
		Leaving Water Temperature	Heating	°C	15~55 (H/P : 25~55)	15~55 (H/P : 25~55)	15~55 (H/P : 25~55)
			Cooling	°C	5~25	5~25	5~25
		Ambient Temperature	Heating	°C	-25~35	-25~35	-25~35
			Cooling	°C	10~46	10~46	10~46
			DHW	°C	-25~43	-25~43	-25~43
Wall-Mounted Hydro Unit	Power Supply			Φ, #, V, Hz	1Φ, 2, 220~240V, 50Hz	1Φ, 2, 220~240V, 50Hz	1Φ, 2, 220~240V, 50Hz
	Expansion Vessel			litres	8	8	8
	Sound	Sound Pressure[2]	Std	dB(A)	31	31	31
		Sound Power	Std	dB(A)	48	48	48
	Dimensions	Net Weight		kg	45.5	45.5	45.5
		Net Dimensions (WxHxD)		mm	510 x 850 x 315	510 x 850 x 315	510 x 850 x 315
Outdoor Unit	Power Supply			Φ, V, Hz	1Φ, 2, 220~240V, 50Hz	1Φ, 2, 220~240V, 50Hz	1Φ, 2, 220~240V, 50Hz
	Compressor	Type		-	Rotary Comp	Rotary Comp	Rotary Comp
	Sound	Sound Pressure[2]	Heating Std	dB(A)	47	48	51
			Cooling Std	dB(A)	46	47	50
		Sound Power	Heating Std	dB(A)	65	67	69
	Dimensions	Net Weight		kg	61.0	61.0	74.0
		Net Dimensions (WxHxD)		mm	880 x 793 x 310	880 x 793 x 310	940 x 998 x 330
	Refrigerant	Type		-	R410A	R410A	R410A
					These products contain R410A (GWP=2.088) which is fluorinated greenhouse gas.		
		Factory Charging		tCO_2e	5.43	5.43	5.01
				kg	2.6	2.6	2.4
	Piping	Piping Connections	Liquid Pipe	Φ, mm (inch)	9.52 (3/8")	9.52 (3/8")	9.52 (3/8")
			Gas Pipe	Φ, mm (inch)	15.88 (5/8")	15.88 (5/8")	15.88 (5/8")
		Piping Length (ODU-IDU)	Max.[Equiv.]	m	30	30	30
		Level Difference (IDU-IDU)	Max.	m	20	20	20
		Chargeless Length		m	10	10	10
		Water Pipe	Inlet/Outlet	Φ, inch	1+1/4"	1+1/4"	1+1/4"







AE090MNYDGH/EU AE090MXTPGH/EU	AE160MNYDEH/EU AE120MXTPEH/EU	AE160MNYDGH/EU AE120MXTPGH/EU	AE160MNYDEH/EU AE160MXTPEH/EU	AE160MNYDGH/EU AE160MXTPGH/EU
9.000	12.000	12.000	16.000	16.000
8.000	12.000	12.000	14.500	14.500
2.120	2.720	2.720	3.950	3.950
1.860	2.900	2.900	3.840	3.840
4,25	4,41	4,41	4,05	4,05
4,30	4,14	4,14	3,78	3,78
4,45	4,66	4,66	4,63	4,63
A++/A	A++/A	A++/A	A++/A	A++/A
10,00	28,00	10,00	32,00	12,00
16,10	35,00	16,10	40,00	16,10
4	5	5	7	7
4,50	6,00	6,00	7,70	7,70
9,00	12,10	12,10	15,40	15,40
15~55 (H/P : 25~55)	15~55 (H/P : 25~55)	15~55 (H/P : 25~55)	15~55 (H/P : 25~55)	15~55 (H/P : 25~55)
5~25	5~25	5~25	5~25	5~25
-25~35	-25~35	-25~35	-25~35	-25~35
10~46	10~46	10~46	10~46	10~46
-25~43	-25~43	-25~43	-25~43	-25~43
3Φ, 4, 380~415V, 50Hz	1Φ, 2, 220~240V, 50Hz	3Φ, 4, 380~415V, 50Hz	1Φ, 2, 220~240V, 50Hz	3Φ, 4, 380~415V, 50Hz
8	8	8	8	8
31	38	38	38	38
48	55	55	55	55
46.5	46.5	46.5	46.5	46.5
510 x 850 x 315	510 x 850 x 315	510 x 850 x 315	510 x 850 x 315	510 x 850 x 315
3Φ, 4, 380~415V, 50Hz	1Φ, 2, 220~240V, 50Hz	3Φ, 4, 380~415V, 50Hz	1Φ, 2, 220~240V, 50Hz	3Φ, 4, 380~415V, 50Hz
Rotary Comp	Rotary Comp	Rotary Comp	Rotary Comp	Rotary Comp
51	52	52	55	55
50	51	51	54	54
69	70	70	73	73
76.0	107.0	107.0	107.0	107.0
940 x 998 x 330	940 x 1,420 x 330	940 x 1,420 x 330	940 x 1,420 x 330	940 x 1,420 x 330
R410A	R410A	R410A	R410A	R410A
	These products contain R410A (GWP=2.088) which is fluorinated greenhouse gas.			
5.01	7.31	7.31	7.31	7.31
2.4	3.5	3.5	3.5	3.5
9.52 (3/8")	9.52 (3/8")	9.52 (3/8")	9.52 (3/8")	9.52 (3/8")
15.88 (5/8")	15.88 (5/8")	15.88 (5/8")	15.88 (5/8")	15.88 (5/8")
30	70	70	70	70
20	30	30	30	30
10	10	10	10	10
1+1/4"	1+1/4"	1+1/4"	1+1/4"	1+1/4"

Accessories





EHS Controller	Wi-Fi Kit	External Thermostat
MWR-WW00N	MIM-H03N	MRW-TA

[1] A2W Conditions : (Heating) Water In/Out 30°C/35°C, Outdoor Air 7°C[DB]/6°C[WB]; (Cooling) Water In/Out 23°C/18°C, Outdoor Air 35°C[DB].

[2] Sound pressure level is obtained in an anechoic room. Sound pressure level is a relative value, depending on the distance and acoustic environment. Sound pressure level may differ depending on operation conditions.

TDM Plus

Specifications

TDM Plus Wall-Mounted

- Easy Filter Plus
- Triangle Design
- Wi-Fi Control through Samsung SmartThings

Type / Model Name				Wall-Mounted AE022MNADEH/EU	Wall-Mounted AE028MNADEH/EU	Wall-Mounted AE036MNADEH/EU	Wall-Mounted AE056MNADEH/EU	Wall-Mounted AE071MNADEH/EU
Power Supply			Φ, #, V, Hz	1,220-240,50	1,220-240,50	1,220-240,50	1,220-240,50	1,220-240,50
Performance	Capacity	Cooling	kW	2,2	2,8	3,6	5,6	7,1
		Heating	kW	2,5	3,2	4,0	6,3	8,0
Power	Power Input	Cooling	W	15,0	16,0	20,0	27,0	41,0
		Heating	W	18,0	24,0	28,0	31,0	53,0
	Current Input	Cooling	A	0,1	0,1	0,2	0,2	0,3
		Heating	A	0,2	0,2	0,2	0,3	0,4
Fan	Type		-	Crossflow Fan	Crossflow Fan	Crossflow Fan	Crossflow Fan	Crossflow Fan
	Quantity		EA	1	1	1	1	1
	Air Flow Rate	H/M/L (UL)	m³/min	5.4(C) / 6.5(H)	5.7(C) / 8.5(H)	7.1 (C) / 10.0 (H)	11.8 (C) / 15.0 (H)	14.8 (C) / 17.4 (H)
Fan Motor	Type		-	BLDC Feedback	BLDC Feedback	BLDC Feedback	BLDC Feedback	BLDC Feedback
	Output x n		W	27x1	27x1	27x1	27x1	27x1
Piping Connections	Liquid Pipe		Φ, mm (inch)	6.35 (1/4")	6.35 (1/4")	6.35 (1/4")	6.35 (1/4")	9.52 (3/8")
	Gas Pipe		Φ, mm (inch)	12.7 (1/2")	12.7 (1/2")	12.7 (1/2")	12.7 (1/2")	15.88 (5/8")
Wiring connections	For power supply below 20m/over 20m	Min.	mm²	1.5/2.5	1.5/2.5	1.5/2.5	1.5/2.5	1.5/2.5
	Communication	Min.	mm²	0,75	0,75	0,75	0,75	0,75
Refrigerant	Type		-	R410A	R410A	R410A	R410A	R410A
	Control Method		-	EEV NOT INCLUDED	EEV NOT INCLUDED	EEV NOT INCLUDED	EEV NOT INCLUDED	EEV NOT INCLUDED
Sound	Sound Pressure	H/M/L	dB(A)	33 / 28 / 23	35 / 30 / 25	36 / 32 / 29	39 / 35 / 32	44 / 40 / 36
	Sound Power		dB(A)	50	53	54	57	61
Dimensions	Net Weight		kg	7,9	8	9,5	14,3	14,3
	Net Dimensions (W×H×D)		mm	750x249x246	750x249x246	826x261x261	1065x301x294	1065x301x294

Accessories







Room EEV Kit	Single EEV Kit	Remote Control	Touch Controller	Wired Remote Control
MXD-E**K***A	MEV-E**SA	AR-EH03E	MWR-SH11N	MWR-WE13N

TDM Plus

Specifications

TDM Plus Slim Duct

- Slim design with thickness of just 200mm
- 750 mmH_2O condensation drain pump (optional)
- Antibacterial filter included






Type / Model Name				Slim Duct AE022MNLDEH/EU	Slim Duct AE028MNLDEH/EU	Slim Duct AE036MNLDEH/EU	Slim Duct AE056MNLDEH/EU
Power Supply			Φ, #, V, Hz	1,220-240,50	1,220-240,50	1,220-240,50	1,220-240,50
Performance	Capacity	Cooling / Heating	kW	2.2/2.5	2.8/3.2	3.6/4.0	5.6/6.3
Power	Power Input	Cooling / Heating	W	0.30/0.30	60/60	65/65	95/95
	Current Input	Cooling / Heating	A	0.30/0.30	0.32/0.32	0.33/0.33	0.53/0.53
Fan	Type		-	Sirocco Fan	Sirocco Fan	Sirocco Fan	Sirocco Fan
	Quantity		EA	2	2	2	2
	Air Flow Rate	H/M/L (UL)	m³/min	7.0 / 6.1 / 5.3	7.5 / 6.6 / 5.6	7.5 / 6.6 / 5.6	12.0 / 10.5 / 9.0
	External Pressure	Max. (Min/ Std/Max)	mmAq	0/1/3	0/1/3	0/1/3	0/2/4
			Pa	0/9.8/29.4	0/9.8/29.4	0/9.8/29.4	0/19.6/39.2
Fan Motor	Type		-	SSR non-feedback	SSR non-feedback	SSR non-feedback	SSR non-feedback
	Output x n		W	28x1	28x1	28x1	50x1
Piping Connections	Liquid Pipe		Φ, mm (inch)	6.35 (1/4")	6.35 (1/4")	6.35 (1/4")	6.35 (1/4")
	Gas Pipe		Φ, mm (inch)	12.7 (1/2")	12.7 (1/2")	12.7 (1/2")	12.7 (1/2")
Wiring connections	For power supply below 20m/over 20m	Min.	mm²	1.5/2.5	1.5/2.5	1.5/2.5	1.5/2.5
	Communication	Min.	mm²	0,75	0,75	0,75	0,75
Refrigerant	Type		-	R410A	R410A	R410A	R410A
Sound	Sound Pressure	H/M/L	dB(A)	26 / 24 / 21	28 / 26 / 23	32 / 30 / 27	36 / 34 / 31
	Sound Power		dB(A)	49	49	51	55
Dimensions	Net Weight		kg	19	19	19,5	24,5
	Net Dimensions (W×H×D)		mm	700 x 199 x 600	700 x 199 x 600	700 x 199 x 600	900x199x600
Optional Accessories	Drain Pump	Model	-	MDP-E075SEE3D	MDP-E075SEE3D	MDP-E075SEE3D	MDP-E075SEE3D
		Max. lifting Height/ Displace-ment	mm / Liter/h	750 / 24	750 / 24	750 / 24	750 / 24

Accessories






Drain Pump	Remote Control	Touch Controller	Wired Remote Control	Wireless Receiver Kit
MDP-E075SEE3D	AR-EH03E	MWR-SH11N	MWR-WE13N	MRK-A10N

TDM Plus

Specifications

TDM Plus MSP Duct

- External static pressure range from 0 to 14 mmAq
- Built-in electronic expansion valve (EEV) for refrigerant flow control (2000 step)
- Long-life washable permanent filter is included
- Auto Restart function.
- Built-in condensation drain pump (750 mmH2O)
- SPi Ioniser device (optional)





Type / Model Name				MSP Duct AE071MNMPEH/EU	MSP Duct AE090MNMPEH/EU
Power Supply			Φ, #, V, Hz	1,220-240,50	1,220-240,50
Performance	Capacity	Cooling / Heating	kW	7.1/8.0	9.0/10.0
Power	Power Input	Cooling / Heating	W	120/120	145/145
	Current Input	Cooling / Heating	A	1.0/1.0	1.2/1.2
Fan	Type		-	Sirocco Fan	Sirocco Fan
	Quantity		EA	2	2
	Air Flow Rate	H/M/L (UL)	m³/min	22 / 19 / 16	29 / 25 / 22
	External Pressure	Max. (Min/ Std/Max)	mmAq	0 / 3 / 15	0 / 4 / 15
			Pa	0 / 29.4 / 147.2	0 / 39.2 / 147.2
Fan Motor	Type		-	BLDC Feedback	BLDC Feedback
	Output x n		W	153x1	153x1
Piping Connections	Liquid Pipe		Φ, mm (inch)	9.52 (3/8")	9.52 (3/8")
	Gas Pipe		Φ, mm (inch)	15.88 (5/8")	15.88 (5/8")
Wiring connections	For power supply below 20m/over 20m	Min.	mm²	1.5/2.5	1.5/2.5
	Communication	Min.	mm²	0,75	0,75
Refrigerant	Type		-	R410A	R410A
Sound	Sound Pressure	H/M/L	dB(A)	37 / 33 / 29	38 / 35 / 32
	Sound Power		dB(A)	57	58
Dimensions	Net Weight		kg	25,5	33
	Net Dimensions (W×H×D)		mm	850x250x700	1,200x250x700
Optional Accessories	Drain Pump	Model	-	MDP-G075SQ(built-in)	MDP-G075SQ(built-in)
				MDP-G075SP(external)	MDP-G075SP(external)
		Max. lifting Height/ Displace-ment	mm / Liter/h	750 / 24	750 / 24

Accessories



Built-in Drain Pump

MDP-G075SQ



External Drain Pump

MDP-G075SP



Remote Control

AR-EH03E



Touch Controller

MWR-SH11N



Wired Remote Control

MWR-WE13N

Wireless Receiver Kit

MRK-A10N

Specifications

TDM Plus Console

- SPi Ioniser device (included)
- Slim design with width of 100 mm
- Built-in electronic expansion valve (EEV) for refrigerant flow control (2000 step)
- Two separate air outlets, upper (cooling) and bottom (heating) to avoid stratifications
- Long-life washable permanent filter
- Auto Restart function






Type / Model Name				Console AE022MNJDEH/EU	Console AE028MNJDEH/ EU	Console AE036MNJDEH/ EU	Console AE056MNJDEH/ EU
Power Supply			Φ, #, V, Hz	1,220-240,50	1,220-240,50	1,220-240,50	1,220-240,50
Performance	Capacity	Cooling / Heating	kW	2.2/2.5	2.8/3.2	3.6/4.0	5.6/6.3
Power	Power Input	Cooling / Heating	W	16/16	30/30	35/35	62/62
	Current Input	Cooling / Heating	A	0.13/0.13	0.25/0.25	0.29/0.29	0.49/0.49
Fan	Type		-	Turbo Fan	Turbo Fan	Turbo Fan	Turbo Fan
	Quantity		EA	1	1	1	1
	Air Flow Rate	H/M/L (UL)	m³/min	6.3 / 5.4 / 4.9	7.0 / 6.0 / 5.0	8.50 / 7.50 / 6.50	13.0 / 11.5 / 10.0
Fan Motor	Type		-	BLDC Feedback	BLDC Feedback	BLDC Feedback	BLDC Feedback
	Output x n		W	37 x 1	37 x 1	37 x 1	37 x 1
Piping Connections	Liquid Pipe		Φ, mm (inch)	6.35 (1/4")	6.35 (1/4")	6.35 (1/4")	6.35 (1/4")
	Gas Pipe		Φ, mm (inch)	12.7 (1/2")	12.7 (1/2")	12.7 (1/2")	12.7 (1/2")
Wiring connections	For power supply below 20m/over 20m	Min.	mm²	1.5/2.5	1.5/2.5	1.5/2.5	1.5/2.5
	Communication	Min.	mm²	0,75	0,75	0,75	0,75
Refrigerant	Type		-	R410A	R410A	R410A	R410A
Sound	Sound Pressure	H/M/L	dB(A)	34 / 32 / 30	38 / 36 / 34	39 / 37 / 34	43 / 40 / 37
	Sound Power		dB(A)	52	58	59	64
Dimensions	Net Weight		kg	15,5	16	16	16
	Net Dimensions (W×H×D)		mm	720x620x199	720x620x199	720x620x199	720x620x199

Accessories




Touch Controller	Wired Remote Control
MWR-SH11N	MWR-WE13N

Specifications

Wi-Fi Kit



Model		MIM-H03N
Fan	Compatible Controller	MWR-WW00N (R410A)
	Max Connected IDU	16
	App	SmartThings
	Voice recognition	-
	Welcome Cooling/Heating	-
	Automation	-
	Add scene	-
	Energy monitoring	One outdoor power monitoring (Module can not be monitored)
Product Size (mm) WxHXD		120 x 124 x 29



TDM Plus

Dimensional Drawings

TDM Plus Outdoor

AE044/066MXTPEH/EU

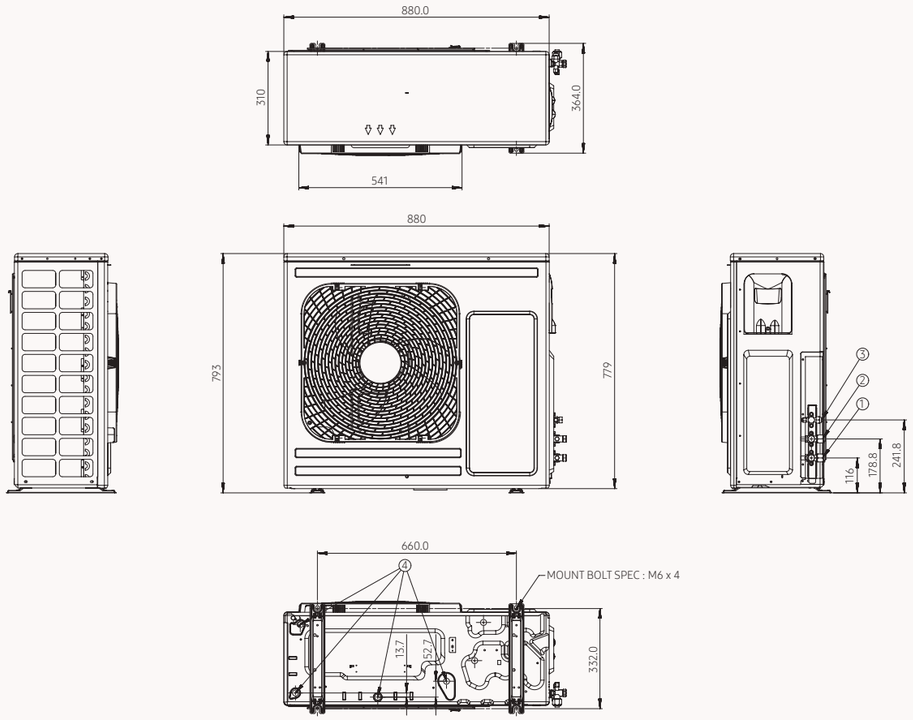

NO	Name	Description	
		4.4kW	6.6kW
1	Refrigerant gas pipe for air	Φ15.88("5/8)	
2	Refrigerant gas pipe for water	Φ15.88("5/8)	
3	Refrigerant liquid pipe	Φ9.52("3/8)	
4	Drain holes	Connect with the provided drain plug.	

TDM Plus Outdoor

AE090MXTP*H/EU

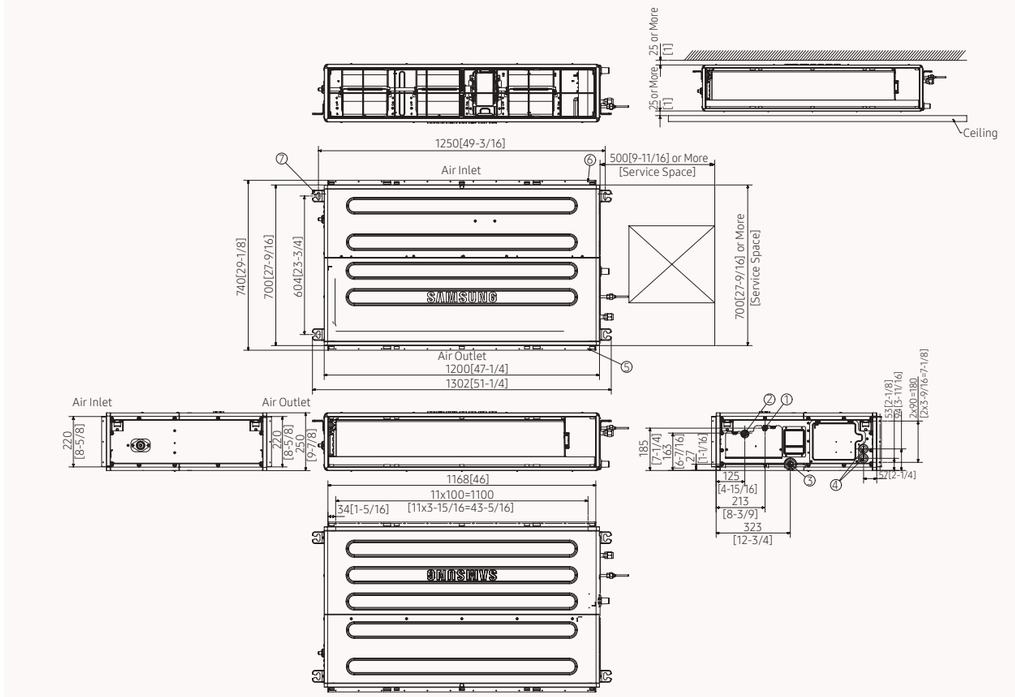

NO	Name	Description
		9kW
1	Refrigerant liquid pipe	Φ15.88("5/8)
2	Refrigerant gas pipe for air	Φ15.88("5/8)
3	Refrigerant gas pipe for water	Front / Side / Rear / Bottom
4	Knockout hole for pipe intake	Front / Side / Rear, Φ34("1-3/8)
5	Power wiring conduits	Front / Side / Rear, Φ22("7/8)
6	Communication wiring conduits	Connect with the provided drain plug.
7	Drain holes	ø28

TDM Plus

Dimensional Drawings

TDM Plus Outdoor

AE120/160MXTP*H/EU*G/EU

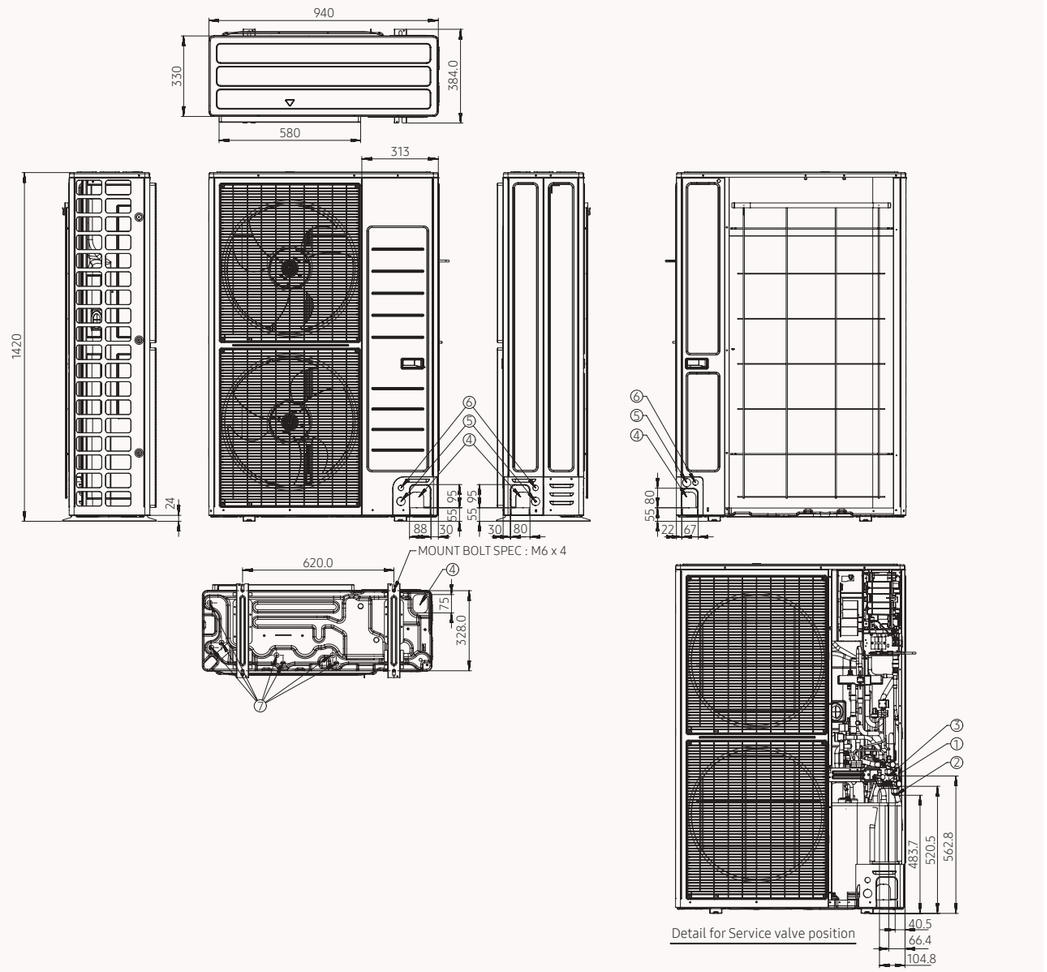

NO	Name	Description	
		12kW	16kW
1	Refrigerant liquid pipe	Φ9.52("3/8)	
2	Refrigerant gas pipe for air	Φ15.88("5/8)	Φ15.88("5/8)
3	Refrigerant gas pipe for water	Φ15.88("5/8)	Φ15.88("5/8)
4	Knockout hole for pipe intake	Front / Side / Rear / Bottom	Front / Side / Rear / Bottom
5	Power wiring conduits	Front / Side / Rear, Φ34("1-3/8)	Front / Side / Rear, Φ34("1-3/8)
6	Communication wiring conduits	Front / Side / Rear, Φ22("7/8)	Front / Side / Rear, Φ22("7/8)
7	Drain holes	Connect with the provided drain plug.	Connect with the provided drain plug.

TDM Plus Wall-Mounted Triangle

AE022/028MNDEH/EU

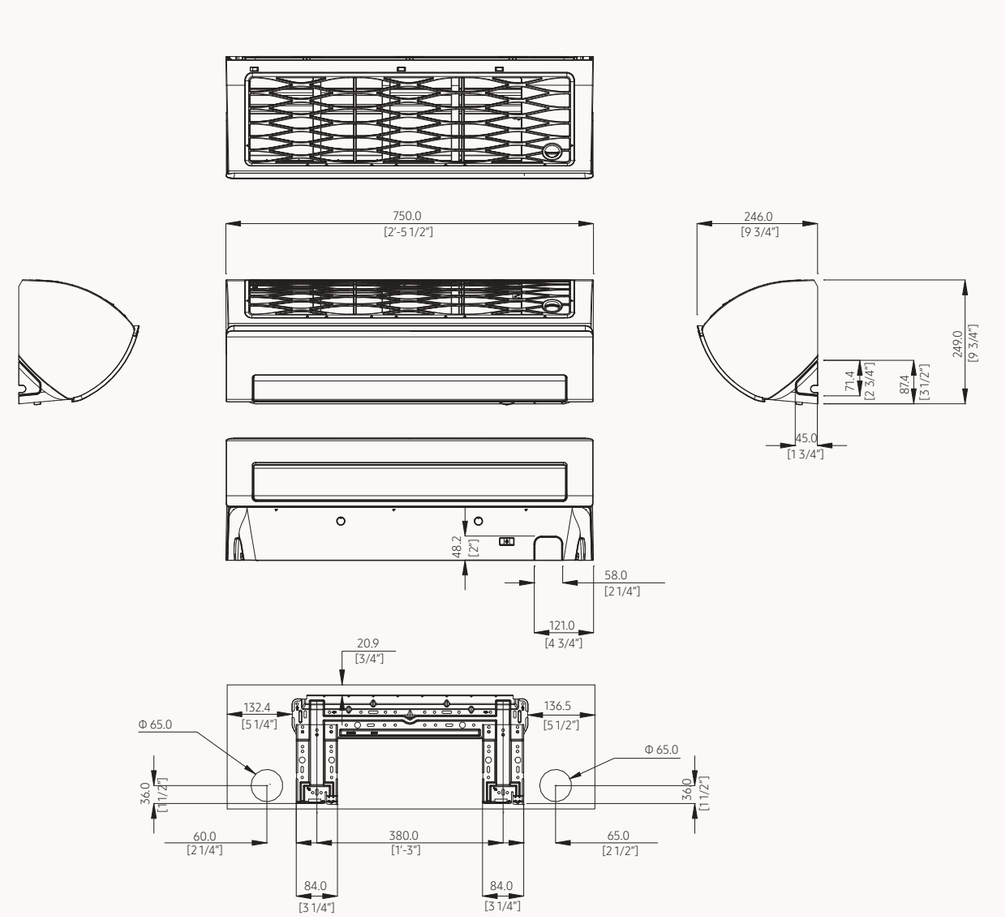

NO	Name	Description	
		2.2kW	2.8kW
1	Refrigerant gas pipe	Φ12.7 Flare	
2	Refrigerant liquid pipe	Φ6.35 Flare	
3	Drain pipe connection	ID 18 Hose	

Dimensional Drawings

TDM Plus Wall-Mounted Triangle

AE036MNDEH/EU

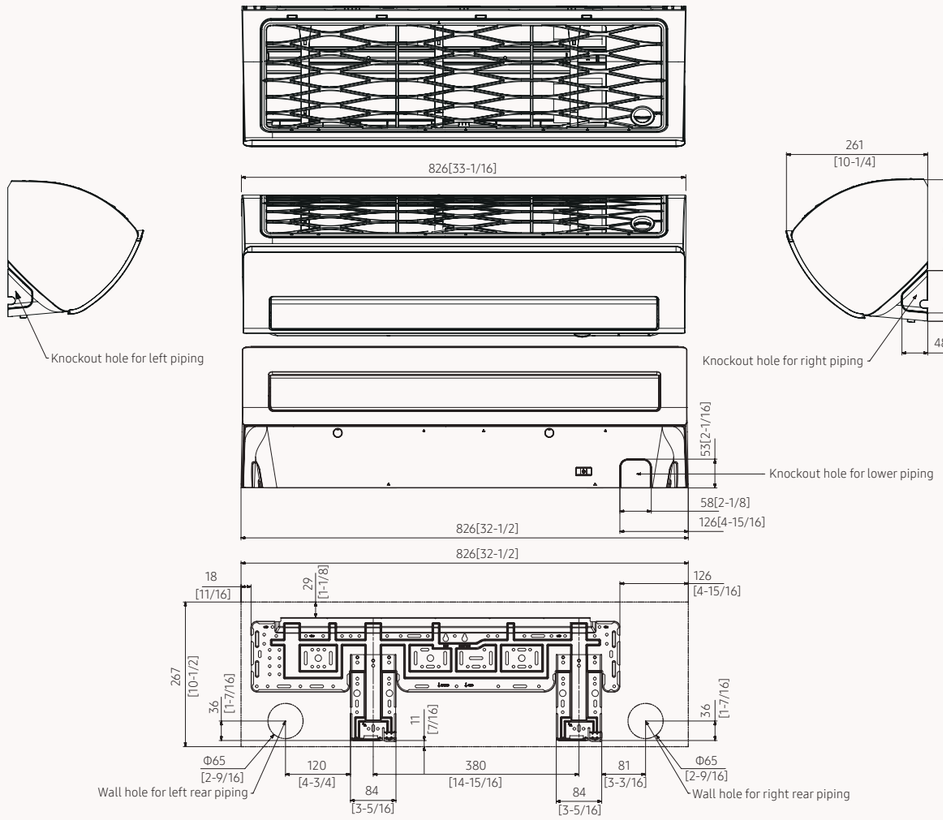

NO	Name	Description
1	Refrigerant gas pipe	Φ6.35(1/4)
2	Refrigerant liquid pipe	Φ12.7(Φ1/2)
3	Drain pipe connection	ID 18 Hose
4	Power supply & Communication wiring conduit	-

TDM Plus Wall-Mounted Triangle

AE056/071MNDEH/EU

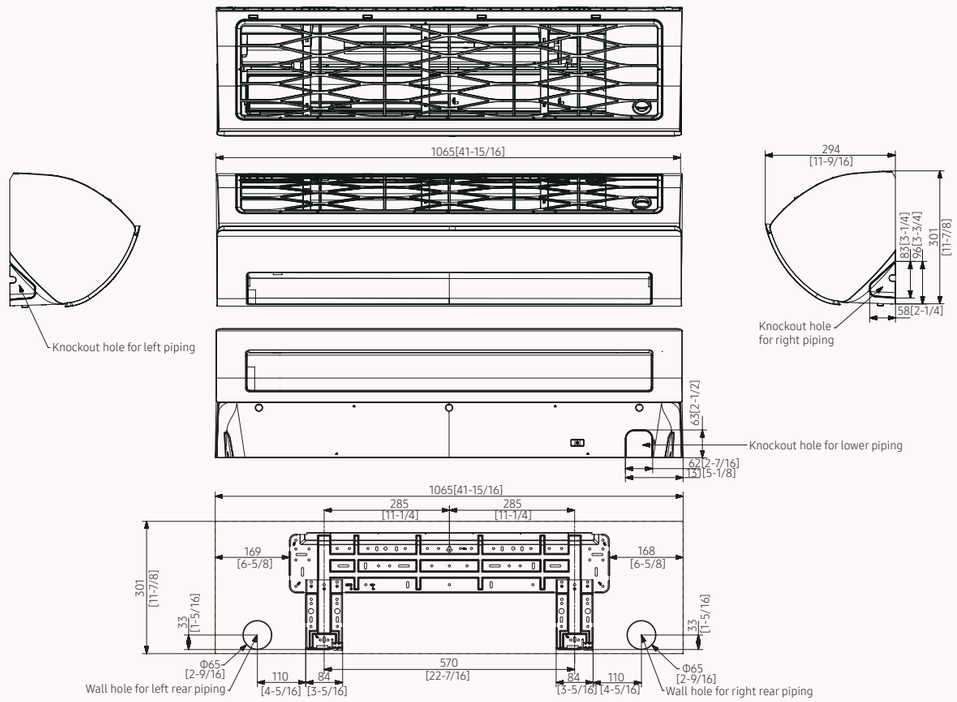

NO	Name	Description	
		5.6kW	7.1kW
2	Refrigerant gas pipe	Φ6.35(1/4)	Φ9.52(3/8)
3	Refrigerant liquid pipe	Φ12.7(Φ1/2)	Φ15.88(Φ5/8)
4	Drain pipe connection	ID 18 Hose	
5	Power supply & Communication wiring conduit	-	

TDM Plus

Dimensional Drawings

TDM Plus Slim Duct

AE022/028/036MNLDEH/EU

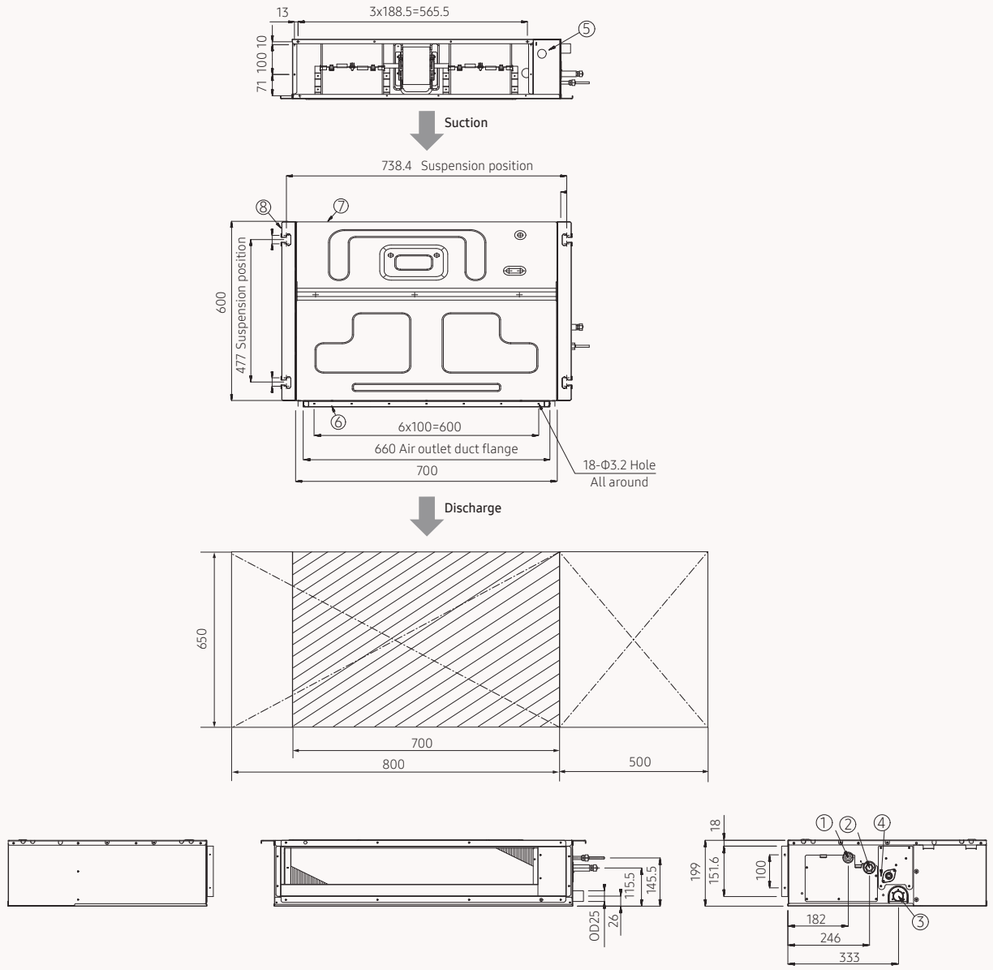

NO	Name	Description
1	Liquid pipe connection	Φ6.35(1/4")
2	Gas pipe connection	Φ12.70(1/2")
3	Drain pipe connection without drain pump	VP25(OD Φ32, ID Φ25)
4	Drain pipe connection with drain pump	VP25(OD Φ32, ID Φ25)
5	Power supply/Communication connection	-
6	Air discharge grille flange	-
7	Return air side	-
8	Hook	Φ9.52 or M10

TDM Plus MSP Duct

AE056MNLDEH/EU

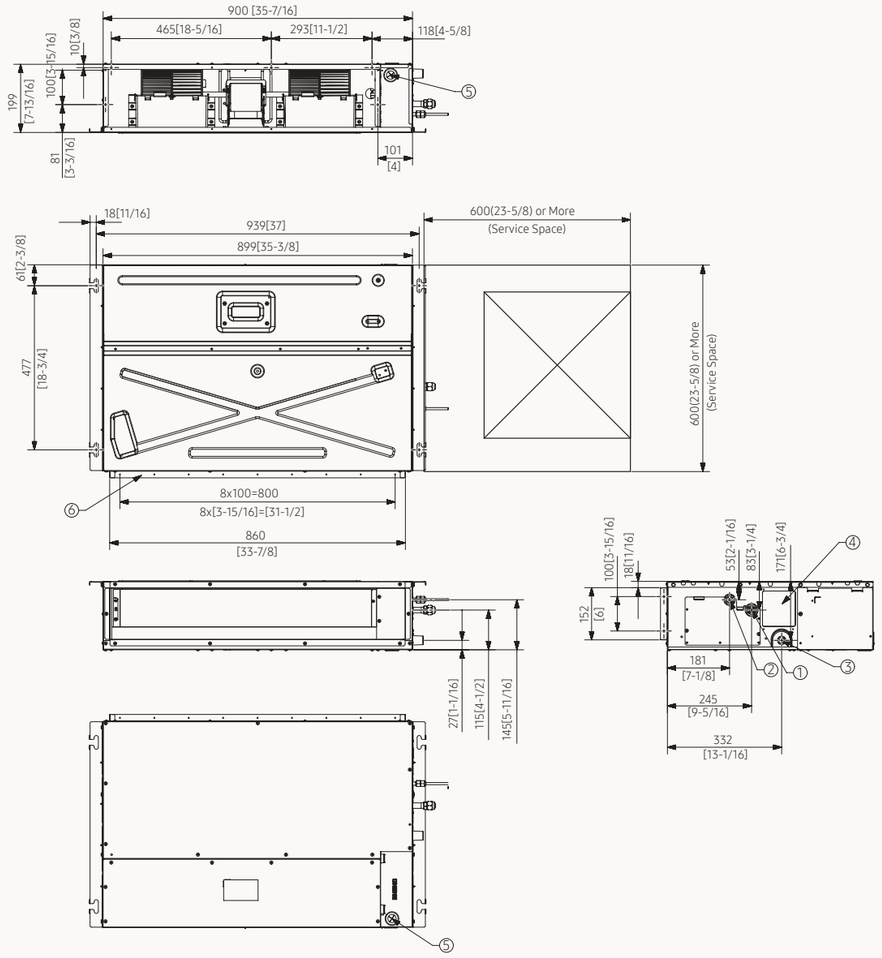

NO	Name	Description
1	Gas pipe connection	Φ12.7(1/2)
2	Liquid pipe connection	Φ6.35(1/4)
3	Drain pipe connection	VP-25(OD 32, ID 25)
4	Knockout hole for Drain pump	Option kit
5	Power supply & Communication wiring conduit	-
6	Air outlet duct flange	-

Dimensional Drawings

TDM Plus MSP Duct

AE071MNMPEH/EU

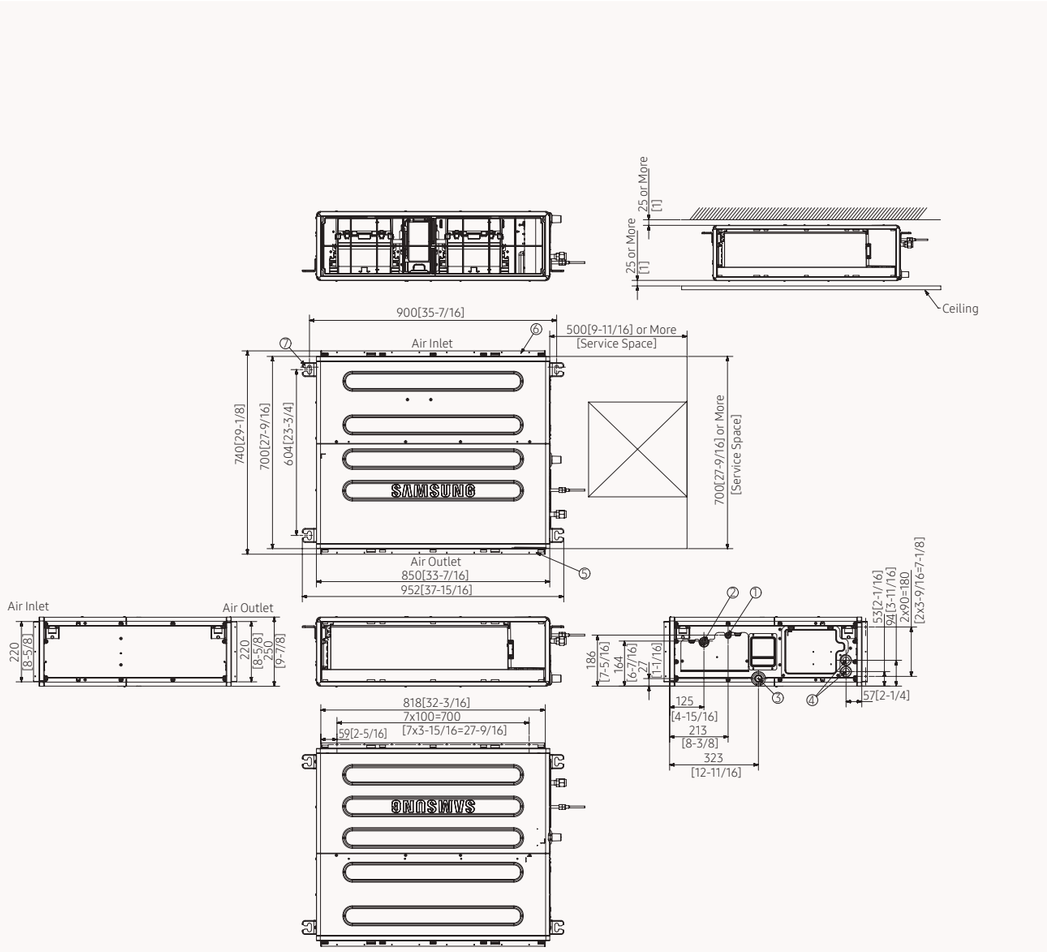

NO	Name	Description
1	Liquid pipe connection	Φ9.52(3/8)
2	Gas pipe connection	Φ15.88(5/8)
3	Drain pipe connection	VP-25(OD 32, ID 25)
4	Power supply & Communication wiring conduit	-
5	Air suction flange	-
6	Air discharge flange	-
7	Hook	Use M8~M10 bolt(4ea)

TDM Plus MSP Duct

AE090MNMPEH/EU

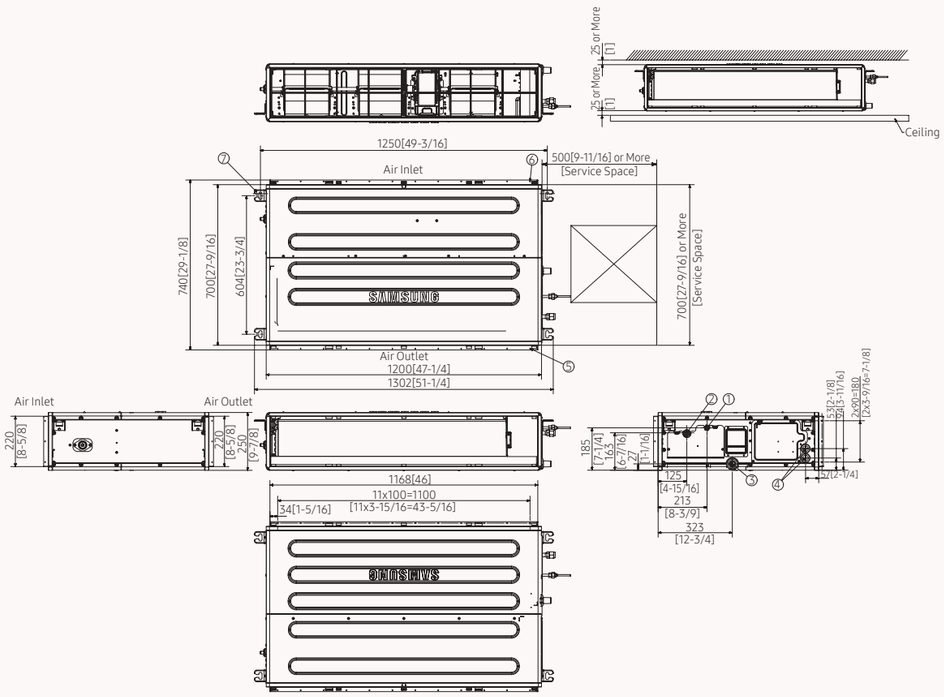

NO	Name	Description
1	Liquid pipe connection	Φ9.52(3/8)
2	Gas pipe connection	Φ15.88(5/8)
3	Drain pipe connection	VP-25(OD 32, ID 25)
4	Power supply & Communication wiring conduit	-
5	Air suction flange	-
6	Air discharge flange	-
7	Hook	Use M8~M10 bolt(4ea)

TDM Plus

Dimensional Drawings

TDM Plus Console

AE022/028/036/056MNJDEH/EU

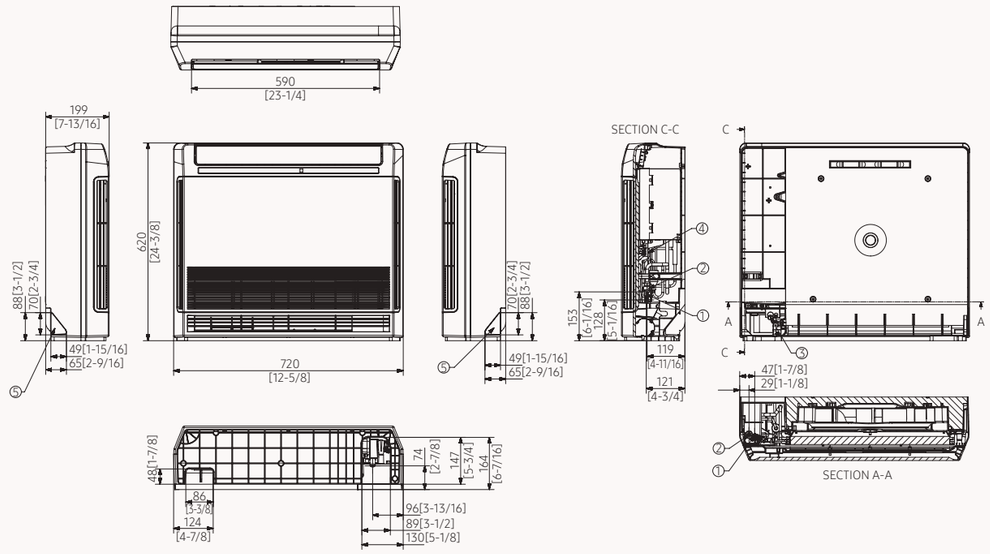

NO	Name	Description
1	Liquid pipe connection	Φ6.35(1/4)
2	Gas pipe connection	Φ12.7(1/2)
3	Drain pipe connection	ID 18mm[11/16 inch] Hose
4	Power supply & Communication wiring conduit	-
5	Knockout hole for drain hose	-

Wall-Mounted Hydro Unit

AE090/160MNYD*/EU

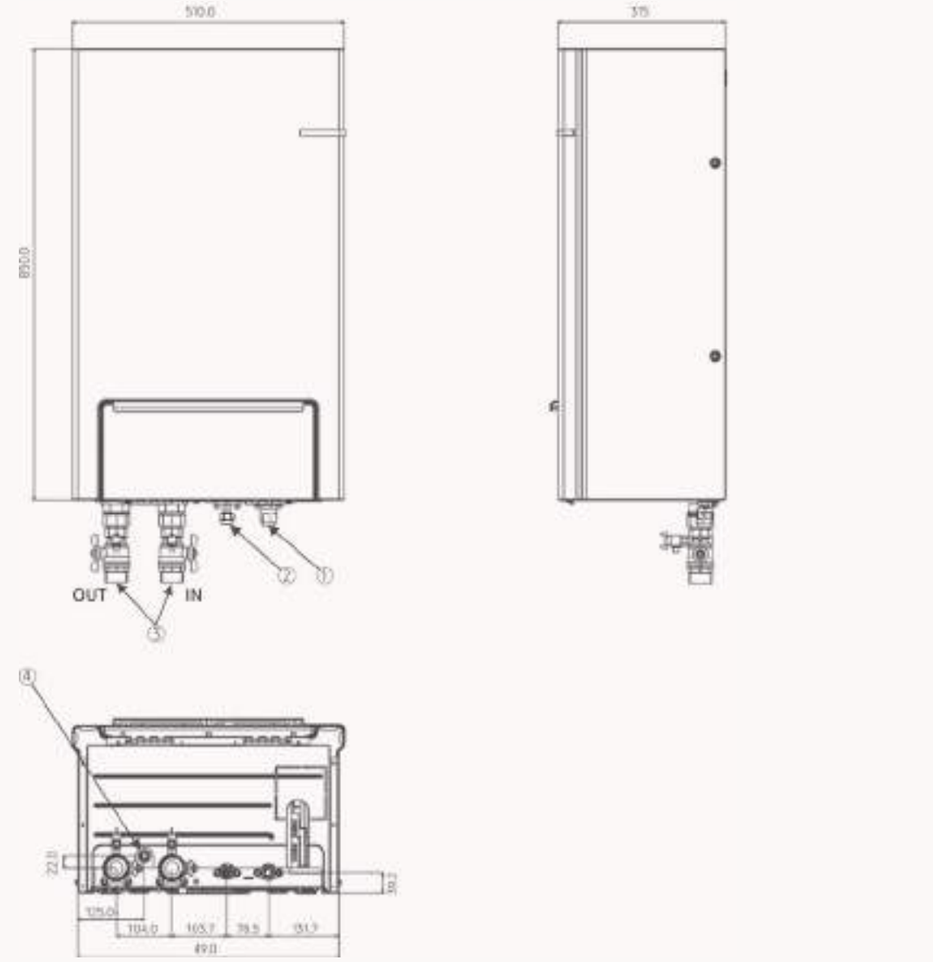

NO	Name
1	Gas Ref. Pipe
2	Liquid Ref. Pipe
3	Water Pipe (Inlet/Outlet)
4	Drain Hose Connector

TDM Plus

Controls



5.01



5.02

Lineup

	Product	Model	Image	Matchable Products
Individual Control System	Wireless Remote Controller	AR-EH03E		DVM, FJM, CAC, EHS
	Wired Touch Controller	MWR-WW10N		EHS
Centralised Control System	Touch Centralised Controller	MCM-A300N		DVM, FJM, CAC, ERV Plus, EHS Split/Mono
	Wi-Fi Kit	MIM-H04EN		All
		MIM-H03N		All
Integrated Management System	DMS2.5	MIM-D01AN		DVM, FJM, CAC, ERV Plus, EHS Split/Mono
	S-NET3	MST-P3P		

	Product	Model	Image	Matchable Products
Gateway System	BACnet Gateway	MIM-B17BN		DVM, FJM, CAC, ERV Plus, EHS Split/Mono
	LonWorks Gateway	MIM-B18BN		DVM, FJM, CAC, ERV Plus, EHS Split/Mono
	External Contact Interface Module	MIM-B14		DVM, RAC, FJM, CAC, EHS
	PIM (Pulse Interface Module)	MIM-B16N		DVM, FJM, CAC, ERV Plus, EHS Split/Mono
	Modbus Interface Module	MIM-B19N		DVM, FJM, CAC, EHS, ERV
Installation/ Test Run Solution	S-Converter	MIM-C02N		
Others	External Room Sensor	MRW-TA		DVM, FJM, CAC

Controls

Features & Dimensional Drawings

Individual Control System

Wireless Remote Controller
AR-EH03E





- Operation ON/OFF control
- Fan speed control
- Operation temperature setting
- Filter replacement alarm reset
- Air swing control
- Simple ON/OFF timer
- Indoor unit option code setting
- Option/Setting selection

Wireless Receiver Kit
MRK-A10N



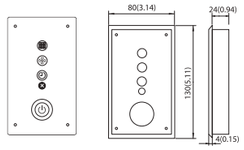

- Concealed wireless signal receiver
- Filter replacement sign
- Fan operation display
- Operation Timer setting display
- Operation ON/OFF button
- Operation On display LED (blue)
- Defrost operation display LED (red)

Wired Touch Controller
MWR-WW10N



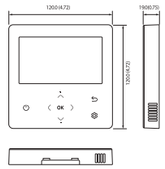

- Large colour LCD display (4.3"")
- Intuitive user interface with simplified design and control
- Energy saving mode
- Energy consumption monitoring
  (This function is only available with certain outdoor unit models)
- Multiple languages supported
  (English, Spanish, French, Italian, German and Polish)
- Temperature sensor included

Centralised Control System

Touch Centralised Controller
MCM-A300N



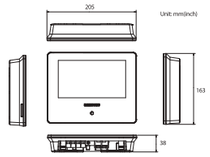

- 7 inch touch LCD controller
- Controls maximum 128 indoor units
- Controls maximum 12 zones
- Schedule control, Indoor unit usage restriction,
  View indoor unit error history

Wi-Fi Kit
MIM-H04EN



- Control and monitor system by mobile phone using the Samsung SmartThings application (Max. 16 units)
- Weekly schedule setting
- Group control and monitoring (ON/OFF)
- Current/daily/weekly/monthly energy usage data of outdoor unit.
  (This function is only available with certain outdoor unit models)

Wi-Fi Kit
MIM-H03N



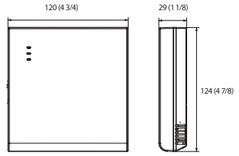

- Control and monitoring system air conditioner by mobile phone using the Samsung SmartThings application (Max. 16 units)
- Weekly schedule setting
- Group control and monitoring (ON/OFF)
- Current/daily/weekly/monthly energy usage data of outdoor unit.
  (This function is available in certain outdoor unit model)

Project: Casa t (Spain)
Project Architecture: ABATON
Interior Design: BATAVIA
Photography: Carlos Muntadas

Controls

Gateway System

BACnet Gateway
MIM-B17BN

With the BMS control and monitoring function, BACnet gateway makes it easy to control the air conditioning network in various ways. BACnet gateway can control up to 256 indoor units, used in combination with S-NET 3.

- Interface for BACnet management system
- Maximum 256 indoor units plus ERVs support with a maximum of 80 interface modules
- Includes DMS 2.5 functions



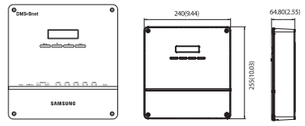

LonWorks Gateway
MIM-B18BN

LonWorks gateway is an interface for Lon-Connection to LonWorks management system, providing you with a more convenient way to manage your air conditioning system. It can control a maximum of 128 indoor units, used in combination with S-NET 3.

- Exclusive use for DMS 2.5 power distribution
- Connection with up to 8 watt-hour meters
- Pulse interface with watt-hour meters
- Watt hour meter - by 3rd party



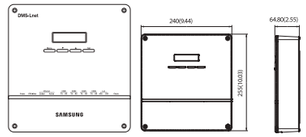

External Contact Interface Module
MIM-B14

Samsung Guestroom Management System saves users the energy and money wasted on cooling an unoccupied room. The air conditioner is activated when the Key-Tag is in place and turns off when the Key-Tag is removed. An external contact interface module provides direct indoor unit control via an external contact signal, as well as window-synchronised indoor unit control. The emergency control function features simple contact input. Plus the module generates indoor unit operation/error state output through relay contacts.

- Direct indoor unit control by external contact signal
- Window-synchronised indoor unit control
- Emergency control with simple contact input
- Indoor unit operation/error state output through relay contacts



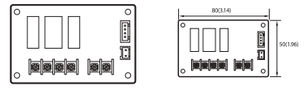

PIM (Pulse Interface Module)
MIM-B16N

- The Watt-hour Meter Interface Module can be exclusively used for DMS 2.5 power distribution, displaying power consumption for each watt-hour meter.
- Exclusive use for DMS 2.5 power distribution
- Connection with up to 8 watt-hour meters
- Pulse interface with watt-hour meters
- Watt hour meter - by 3rd party



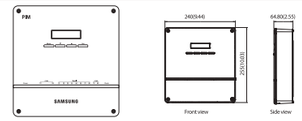

Modbus Interface Module
MIM-B19N

- BMS or 3rd controller can control Samsung SAC by using MODBUS protocol
- Connect up to 4 outdoor units (1 main, 3 subs) and 48 indoor units to each MIM-B19N"



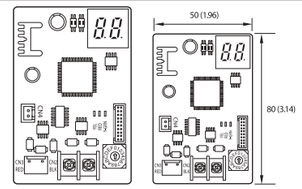

Installation/Test Run Solution

S-Converter
MIM-C02N

- Communication converting module to connect Samsung system air conditioner to a PC.
- Main purpose for use
  - To connect with test run program [Test run program]
  - S-NET Pro: Conventional communication
  - S-NET Pro2: New communication



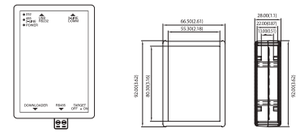

Others

External Room Sensor
MRW-TA

- Indoor unit is operated by MRW-TA instead of its own sensor.
- Wire length : 12m(39ft)



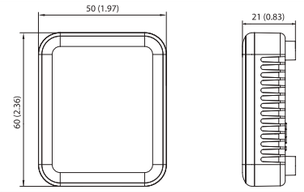

Accessories

Accessories

Classification	Image	Model	Application
Drain Pump		MDP-E075SEE3	Slim Duct (2.2 ~ 5.6kW)
		MDP-G075SP	Global Duct (External Type)
		MDP-G075SQ	Global Duct (Internal Type)
SPi Ioniser		MSD-EAN1	Duct S

Classification	Image	Model	Application
Y- joint		MXJ-YA1509K	15.0kW and below
EEV Kit		MXD-E24K132A	2 Indoor
		MXD-E24K200A	
		MXD-E32K200A	
		MXD-E24K232A	3 Indoor
		MXD-E24K300A	
		MXD-E32K224A	
		MXD-E32K300A	
		MEV-E24SA	1 Indoor
		MEV-E32SA	



Project: Casa L (Spain)
Project Architecture: ÁBATON
Interior Design: BATAVIA
Photography: Carlos Muntadas

Notes

Notes

Notes

Notes

Notes

Notes

Learn more about Samsung Climate Solutions at:
www.samsung.com/climate

Copyright © 2019 Samsung Electronics Air Conditioner Europe B.V. All rights reserved. Samsung is a registered trademark of Samsung Electronics Co., Ltd. Specifications and designs are subject to change without notice and may include preliminary information. Non-metric weights and measurements are approximate. All data was deemed correct at the time of creation. Samsung is not liable for errors or omissions. Some images may be digitally altered. All brand, product, service names and logos are trademarks and/or registered trademarks of their respective owners and are hereby recognised and acknowledged.

Samsung Electronics Co., Ltd. participates in the Eurovent Certification Programme (ECP) for Air Conditioners (AC), Variable Refrigerant Flow (VRF) and Liquid Chilling Packages Heat Pump (LCP-HP). Check for ongoing validity of certificate: www.eurovent-certification.com

Samsung Electronics Air Conditioner Europe B.V.
Evert van de Beekstraat 310, 1118 CX Schiphol
P.O. Box 75810, 1118 ZZ Schiphol
+31 (0)8 81 41 61 00
Netherlands

SAMSUNG